KSAIC0401230

Installation Instructions

24V Interface Kit for Ductless Systems

Fig. 1 — 24V Interface

Read and become familiar with these instructions before beginning the installation.

TABLE OF CONTENTS

PAGE

SAFETY CONSIDERATIONS

Read these instructions thoroughly and follow all warnings or cautions included in the literature and attached to the unit. Consult the local building codes and National Electrical Code (NEC) for special requirements. Recognize safety information.

This is the safety-alert symbol ⚠. When you see this symbol on the unit and in instructions or manuals, be alert to the potential for personal injury. Understand these signal words: **DANGER**, **WARNING**, and **CAUTION**. These words are used with the safety-alert symbol.

DANGER identifies the most serious hazards which may result in severe personal injury or death. **WARNING** signifies hazards which could also result in personal injury or death. **CAUTION** is used to identify unsafe practices which may result in minor personal injury or product and property damage. **NOTE** is used to highlight suggestions which result in enhanced installation, reliability, or operation.

⚠ WARNING

ELECTRICAL SHOCK HAZARD

Failure to follow this warning could result in personal injury or death.

Before beginning any modification or installation of this kit, ensure the main electrical disconnect is in the **OFF** position.

Ensure the power is not connected to the fan coil unit. On some systems, both the fan coil and the outdoor unit may be on the same disconnect. Tag the disconnect switch with a suitable warning label. There may be more than one disconnect.

⚠ CAUTION

EQUIPMENT DAMAGE HAZARD

Failure to follow this warning may result in equipment damage.

DO NOT install the wired controller in an area subjected to excessive steam, oil or sulfide gas. Doing so may cause the controller to deform and/or fail.

⚠ CAUTION

INSTALLATION

Entrust a licensed contractor to install the unit. Installation by unskilled persons may lead to improper installation, electric shock, or fire. Reinstallation must be performed by authorized professionals. Non-compliance may lead to electric shock or fire.

NOTES: Images are for illustration purposes only. Actual models may differ slightly.

INTRODUCTION

The 24V Interface provides further flexibility, functionality and control allowing a single zone or a multi-zone ductless system to be controlled by any 3rd party single-stage conventional thermostat* keeping the Inverter compressor operating as a variable-speed system, making adjustments to maintain more consistent operation.

Features:

- Keeps the Inverter compressor operating as a variable-speed system
- One 24V Interface Kit per indoor head is required
- Rated for outdoor and indoor mounting
- 24V transformer built-in (for ductless applications)
- Dry mode contact for active dehumidification control (for ductless applications)
- Remote on/off contact
- Auxiliary heat control through the third party conventional thermostat**
- Diagnostic code display LEDs

Notes:

- *A conventional 5-wire thermostat is required.
- **A secondary output is necessary for auxiliary heat control

WARNING

EXPLOSION HAZARD
Failure to follow this warning could result in death, serious personal injury, and/or property damage.

Never use air or gases containing oxygen for leak testing or operating refrigerant compressors. Pressurized mixtures of air or gases containing oxygen can lead to an explosion.

WARNING

INSTALLATION
Entrust a licensed contractor to install the unit. Installation by unskilled persons may lead to improper installation, electric shock, or fire. Re-installation must be performed by authorized professionals. Non-compliance may lead to electric shock or fire.

ACCESSORIES

The system is shipped with the following accessories (see Table 1). Use all of the installation parts and accessories to install the system. Improper installation may result in, electrical shock and fire, or cause the equipment to fail.

Keep the installation manual in a safe place and do not discard any accessories until the installation has been completed.

Table 1 — Accessories

No.	Description	Qty	Remarks
1	24V Interface Control box	1	N/A
2	Installation Manual	1	N/A
3	Screws	3	M4X20 (for wall mounting)
4	Wall Anchors	3	For wall mounting
7	Return Air Thermistor Assembly	1	Used on future applications
8	16ft. (5m) Return Air Thermistor Assembly Extension Wires	1	Used on future applications

Table 2 — Accessories

No.	Description	Qty	Type	Remarks
1	Switch Box	1	N/A	N/A
2	Wiring Tube (insulating sleeve and tightening screw)	1	N/A	N/A

WARNING

Wires must be properly sized according to the NEC/NFPA 70, CEC and all prevailing codes, ordinances and standards.
All conductors must be installed with a strain relief eliminating stress on the wire following installation which may result in wire damage and/or overheating with a potential for fire.
Installation must be performed in accordance with the requirement of NEC and CEC by authorized personnel only.
All wiring to be rated for the control box amperage rating.
All wiring installed to meet general industry standards and practices,
DO NOT install near flammable liquids or gases.
DO NOT operate the unit with wet hands, as this could lead to electrical shock.

CAUTION

When connecting with RS 485 communication to the outdoor unit, shielded wire must be used and grounded at one end only.
When using shielded wire the cable should be grounded at one end to reduce EMI.
Return Air Temperature Sensor T1 cable shall not exceed 23ft (7m).

DIMENSIONS

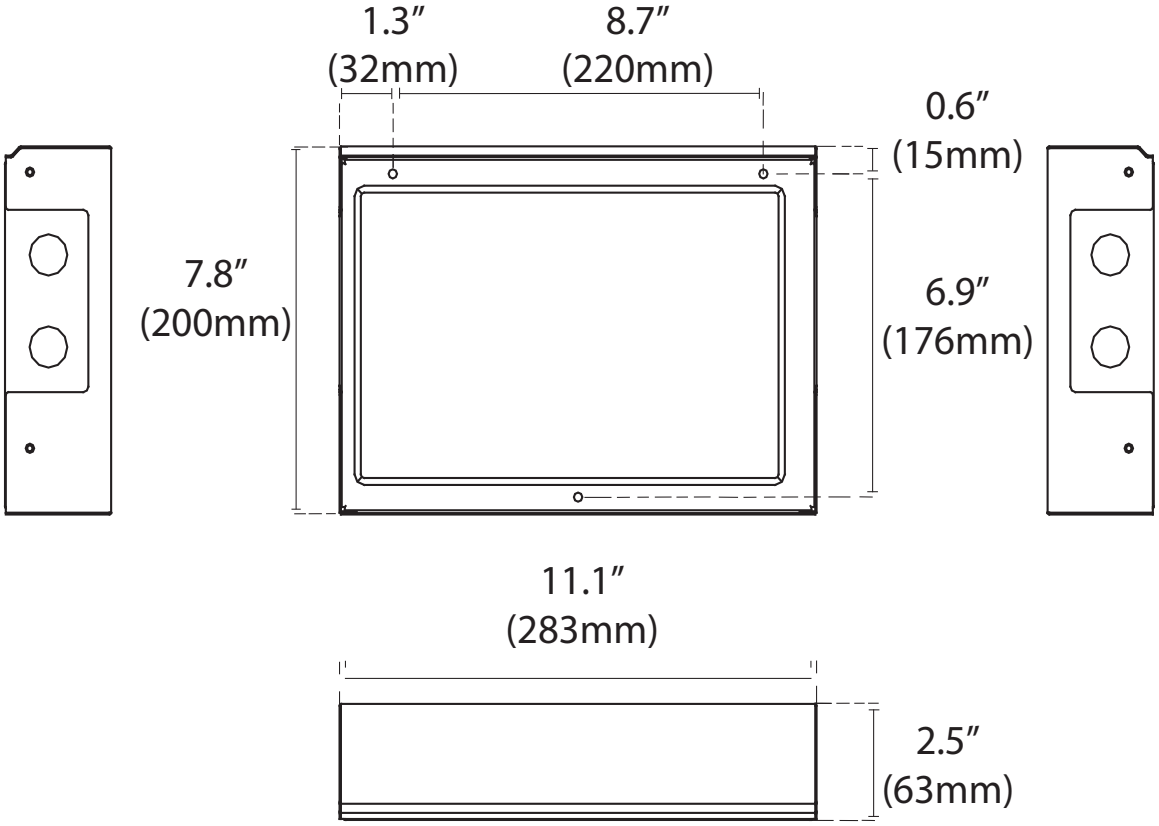

Fig. 2 — 24V Interface Structure Size

CLEARANCES

Table 3 — 24V Interface Clearance Dimensions

Clearances	
Unit	Minimum Value In (mm)
Sides	5.9 (150)
Front	24 (610)*
Top and Bottom	3 (76.2)

NOTE: *24 in (610mm) minimum for service access or use local code.

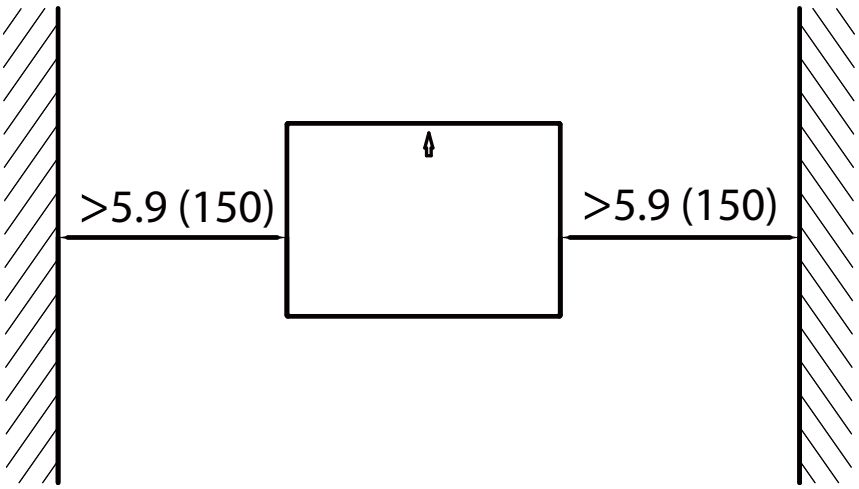

NOTE: ALL DIMENSIONS ARE IN INCH (MM)

Fig. 3 — Clearances

INSTALLATION

Installation Location

The 24V INTERFACE KIT is rated for outdoor and indoor mounting (depending on the application). It is recommended that the kit installation be as close as possible to the indoor unit and the thermostat.

IMPORTANT: Follow the recommended clearances (see“CLEARANCES” on page 3) and install in an area above the ground away from locations where water could enter.

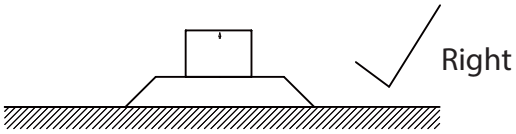

Fig. 4 — Installation Floor Mount View (right way)

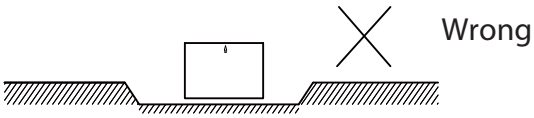

Fig. 5 — Installation Floor Mount View (wrong way)

CAUTION

DO NOT install the 24V INTERFACE KIT near flammable liquids or gases such as gasoline or hydrogen sulfide. Doing so creates a fire hazard.

1. Remove the cover of the **24V INTERFACE KIT.** Remove the six screws of the **24V INTERFACE KIT** with a screwdriver or similar tool. Rotate the lid along the hem to disassemble.

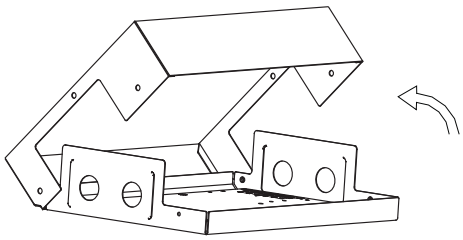

Fig. 6 — Remove the cover

NOTE: Minimum free space required around the kit is 7" (180 mm) for service purposes.

2. Mount the **24V INTERFACE KIT** horizontally (see Fig. 7), by fastening the back plate to the wall with 3 screws (M4x20) and anchors.

CAUTION

The 24V Interface kit cover has a directional arrow on the cover. In case of an outdoor installation be sure to verify, during the mounting process, that this arrow points **UP** upon installation. Failure to mount the kit correctly can cause water ingress into the box which may compromise the electrical component integrity.

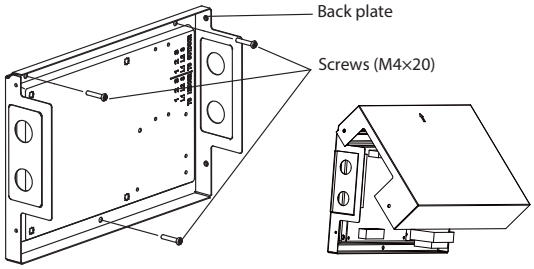

Fig. 7 —24V Interface Kit

NOTE: Place the unit on a flat surface. Be careful not to distort the back plate of the 24V INTERFACE KIT by over tightening the screws.

3. **WIRING** - Based on the system used, wire the unit as described in “SYSTEM CONFIGURATION SCENARIOS” on page 4).
4. Cover the **24V INTERFACE KIT** lid, and lock back in place using the six screws previously removed.

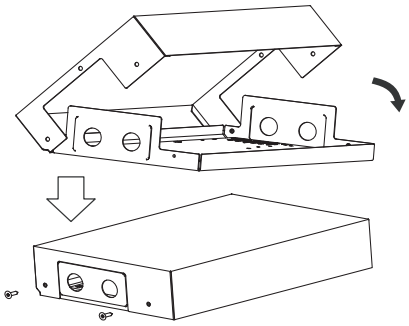

Fig. 8 — Cover the screw

SYSTEM CONFIGURATION

NOTES:

- The thermostat should be configured for use with a as a single stage Cooling and Heating (**DO NOT** configure the thermostat as a Heat Pump).
- The wireless remote controller, wired controller KSACN and Wi-Fi kits KSAIF cannot be used with this 24V interface Kit at the same time. The Swing and LED function may be accessed with the wireless remote controller.

Table 4 — Connection Wiring Specification

Connection Wiring	Outdoor L1, L2, S & G, S1, S2	Indoor L1, L2, S & G, S1, S2	R,C	Y/W/G/G1/ G2/G3/Dry
Size	Refer to the outdoor connecting wires size	Refer to the indoor connecting wires size	18AWG (minimum)	18AWG (minimum)

SYSTEM CONFIGURATION SCENARIOS

Based on the system, utilize the appropriate configuration scenario:

Scenario 1: Single Zone Ductless System with DLCPRA, DLCSRA, DLCERA

Scenario 2: Single Zone Ductless System with DLCLRA

Scenario 3: Multi-zone Ductless System with DLCMRA

SCENARIO 1: SINGLE ZONE OUTDOOR UNITS (DLCPRA, DLCSRA, DLCERA) WITH APPROVED DUCTLESS INDOOR UNITS

- High Wall (sizes 9K-36K)[208-230V]**
- Cassette (sizes 9K-24K)
- Ducted (sizes 9K-24K) (*refer to **NOTES** in the adjacent column)
- Console (sizes 18K-24K)

⚠ CAUTION

Refer to the Compatibility Charts on hvacpartners.com for the proper matches and serial number compatibility. Units built prior to the generation of this serial number require a Control Board Replacement on the indoor unit.

Installation Steps:

1. Run the interconnecting piping from the indoor to the outdoor unit using the correct indoor piping size.
2. Run the interconnecting wiring from the outdoor unit to the 24V interface using terminal connections L1, L2, S and G.
3. Run the interconnecting wiring from the 24V interface to the indoor unit using terminal connections L1, L2, S and G.
4. Run the thermostat wiring from the thermostat to the 24V interface using connections R and C on CN15 and Y, W, G on CN19.
5. Configure the dip switches on the 24V interface accordingly.
6. Configure the thermostat to operate in single stage cooling and heating scenarios **(DO NOT configure the thermostat as a Heat Pump).**

NOTES:

Follow the indoor and outdoor unit's general installation instructions.

*For the Ducted units, in order to initially setup the static pressure, the 24V interface must be bridged. Temporarily connect the communication wires L1, L2, S and G from the indoor to the outdoor unit until the static pressure settings are complete (refer to the Ducted unit installation manual).

On selected indoor units, the Up-Down Swing Louver functions as a control to turn off the indoor unit display (LED) and is available on the unit's wireless remote controller. The Wi-Fi KSAIF and wired remote controllers KSACN are not functional when using the 24V interface.

**For 115V Ductless applications, the 24V transformer must be replaced in the field. This part is available through RCD (part number 11203103000393).

⚠ CAUTION

The conventional thermostat must be configured for use with a single stage air conditioner (Y output **ONLY**) and a single stage heating (W) system.

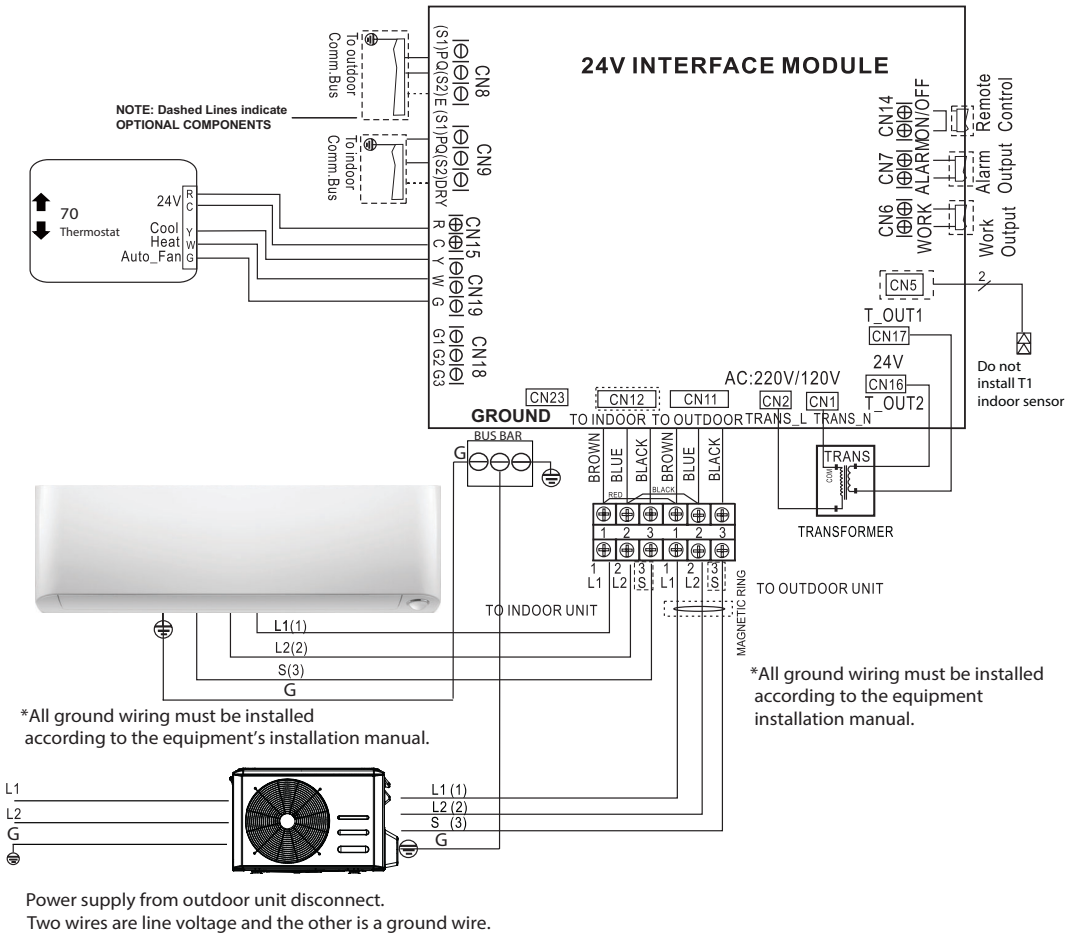

Fig. 9 — Wiring Diagram

IMPORTANT: All ground wiring must be installed according to the equipment's installation manual.

SCENARIO 2: SINGLE ZONE OUTDOOR UNITS (DLCLRA) WITH APPROVED DUCTLESS INDOOR UNITS

- Cassette (sizes 36K-48K)
- Ducted (sizes 36K-58K) (*refer to **NOTES** in the adjacent column)
- Console (sizes 36K-58K)

⚠ CAUTION

Refer to the Compatibility Charts on hvacpartners.com for the proper matches and serial number compatibility. Units built prior to the generation of this serial number would require a Control Board Replacement on the Indoor unit.

Installation Steps:

1. Run the interconnecting piping from the indoor unit to the outdoor unit using the correct indoor piping size.
2. Run the interconnecting wiring from the outdoor unit to the 24V interface using terminal connections L1, L2, and G. Connect the wiring for the S1 and S2 outdoor interface to CN8.
3. Run the interconnecting wiring from the 24V interface to the indoor unit using terminal connections L1, L2, and G. Connect the wiring for the S1 and S2 outdoor interface to CN9.
4. Run the thermostat wiring from the thermostat to the 24V interface using connections R and C on CN15 and Y, W, G on CN19.
5. Configure the dip switches on the 24V interface accordingly.
6. Configure the thermostat to operate in single stage cooling and heating scenarios (**DO NOT** configure the thermostat as a **Heat Pump**).

NOTES:

Follow the indoor and outdoor unit's general installation instructions.

*For Ducted units, in order to initially setup the static pressure, the 24V interface must be bridged. Temporarily connect the communication wires, S1 and S2, from the indoor unit to the outdoor unit until the static pressure settings are complete (see the Ducted unit installation manual). When the static pressure is adjusted, connect S1 and S2 to CN8 and CN9 (See Fig. 21 — on page 11).

On selected indoor units, the Up-Down Swing Louver functions as a control to turn off the indoor unit display (LED) and is available on the unit's wireless remote controller. The Wi-Fi accessories KSAIF and wired remote controllers KSACN are not functional when using the 24V interface.

⚠ CAUTION

The conventional thermostat must be configured for use with a single stage air conditioner (Y output **ONLY**) and a single stage heating (W) system.

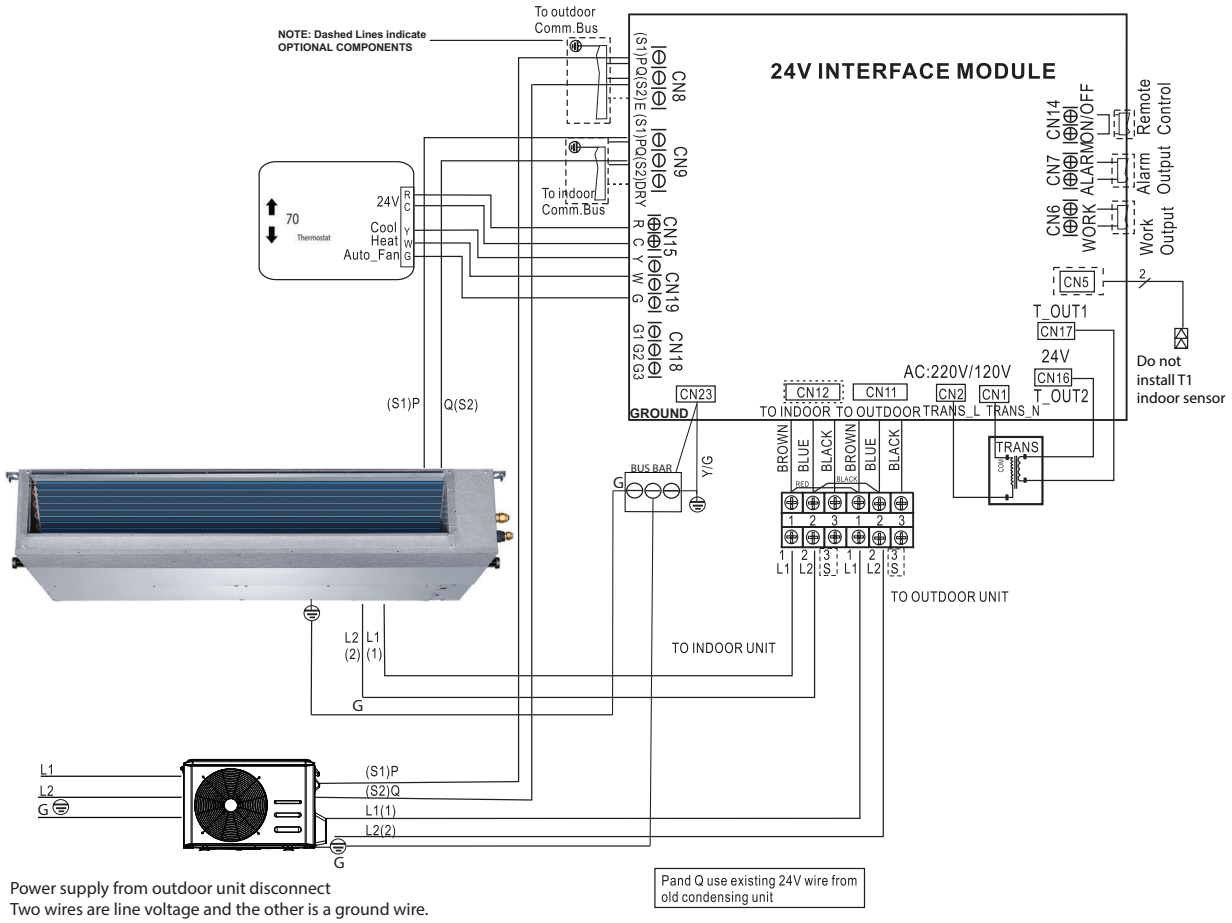

Fig. 10 — Wiring Diagram

SCENARIO 3: MULTI-ZONE OUTDOOR UNITS (DLCMRA) WITH APPROVED DUCTLESS INDOOR UNITS

- High Wall (Sizes 9K-24K)
- Cassette (Sizes 9K-24K)
- Ducted (Sizes 9K-24K) (*refer to **NOTES** in the adjacent column)
- Console (Sizes 9K-24K)

CAUTION

Refer to the Compatibility Charts on hvacpartners.com for the proper matches and serial number compatibility. Units built prior to the generation of this serial number require a Control Board Replacement on the indoor unit.

Installation Steps:

1. Run the interconnecting piping from the indoor unit to the outdoor unit using the correct indoor piping size.
2. Run the interconnecting wiring from the outdoor unit to the 24V interface using terminal connections L1, L2, S, and G.
3. Run the interconnecting wiring from the 24V interface to the indoor unit using terminal connections L1, L2, S and G.
4. Run the thermostat wiring from the thermostat to the 24V interface using connection R and C on CN15 and Y, W, G on CN19.
5. Configure the dip switches on the 24V interface accordingly.
6. Configure the thermostat to operate in single stage cooling and heating scenarios (**DO NOT** configure the thermostat as Heat Pump).

NOTES:

A set one 24V interface and one thermostat is required per indoor unit head. It is not required to use the 24V interface on every single indoor unit head in the system. Follow the indoor and outdoor unit's general installation instructions.

*For Ducted units, in order to initially setup the static pressure, the 24V interface must be bridged. Temporarily connect the communication wires L1, L2, S and G from the indoor to the outdoor unit until the static pressure settings are complete (see the Ducted unit installation manual). When static pressure is adjusted, reconnect L1, L2, S and G wires to the terminal blocks.

In the AUTO mode, the system automatically cools or heats the room according to the user-selected set point.

AUTO mode is recommended for use on single zone applications only. Using **AUTO** changeover on multi-zone applications could set an indoor unit to **STANDBY** mode, indicated with two dashes (--) on the display. Should this occur, the indoor unit powers off until all the indoor units are in the same mode (**COOLING** or **HEATING**). **HEATING** is the system's priority mode. Simultaneous **HEATING** and **COOLING** is not allowed.

On selected indoor units, the **Up-Down Swing Louver** functions as a control to turn off the indoor unit display and is available on the unit's wireless remote controller. The Wi-Fi accessories KSAIF and wired remote controllers KSACN are not functional when using the 24V interface.

CAUTION

The conventional thermostat must be configured for use with a single stage air conditioner (Y output **ONLY**) and a single stage heating (W) system.

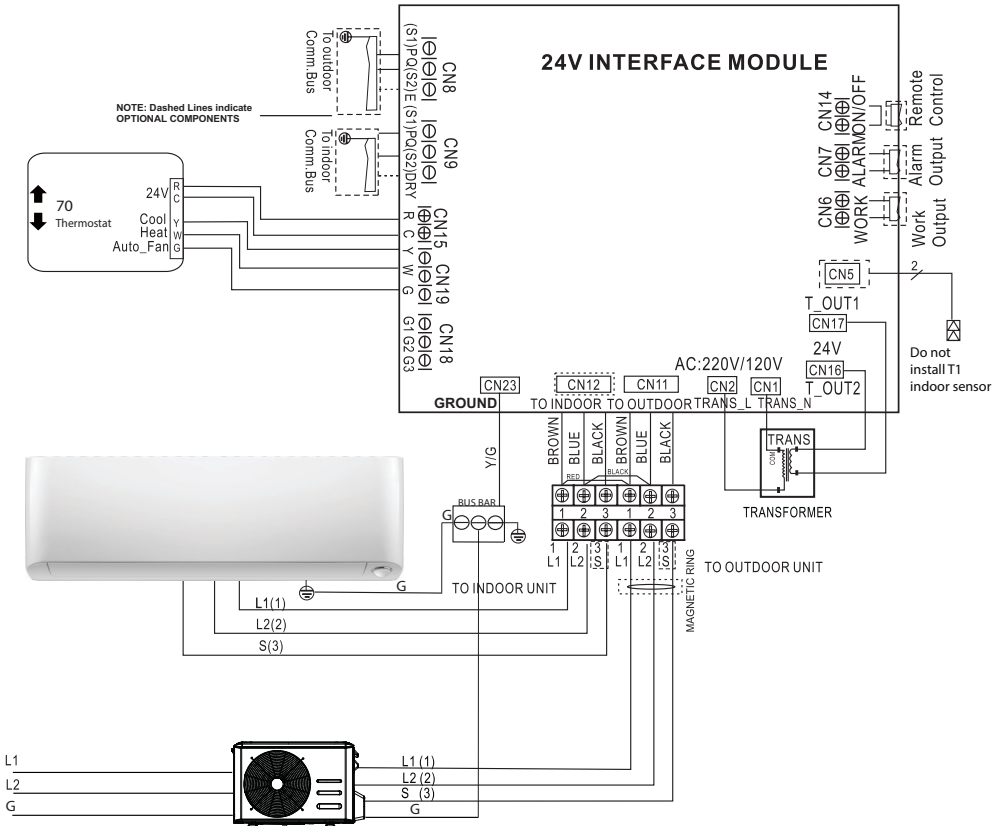

Power supply from outdoor unit disconnect.
Two wires are line voltage and the other is a ground wire.

Fig. 11 — Wiring Diagram

WIRING

All wires must be sized per NEC (National Electrical Code) or CEC (Canadian Electrical Code) and local codes. Use the Electrical Data table MCA (minimum circuit amps) and MOCP (maximum over current protection) to correctly size the wires and the disconnect fuse or breakers respectively. Consult the unit's installation instructions for the Electrical Data tables.

For scenarios 1, 2 and 3 Ductless Systems - The main power is supplied to the outdoor unit; the indoor unit is powered by the 24V interface.

For condensing units with a L1, L2 and S power and communication wiring - The field supplied 14/3 stranded wire with ground and a 600 volt insulation rating, power/communication wiring from the outdoor unit to the 24V Interface Kit, consists of four (4) wires and provides the power for the 24V Interface. Two wires are line voltage AC power, one is communication wiring (S) and the other is a ground wire.

For condensing units with a L1, L2, S1 and S2 power and communication wiring, the field supplied power wiring 14/2 from the outdoor unit to the 24V interface consists of three (3) wires and provides the power for the indoor unit. Two wires are high voltage AC power and one is a ground wire. To minimize voltage drop, the factory recommended wire size is 14/2 stranded with a ground.

A separate shielded 16GA stranded control wire copper conductor only, with a 600 volt rating and double insulated copper wire, must be used as the communication wire from the outdoor unit to the 24V interface and the indoor unit.

Wiring between the outdoor unit to 24V Interface Kit is polarity sensitive. The use of the BX wire is **NOT** recommended.

⚠ CAUTION

The conventional thermostat must be configured for use with a single stage air conditioner (Y output **ONLY**) and a single stage heating (W) system.

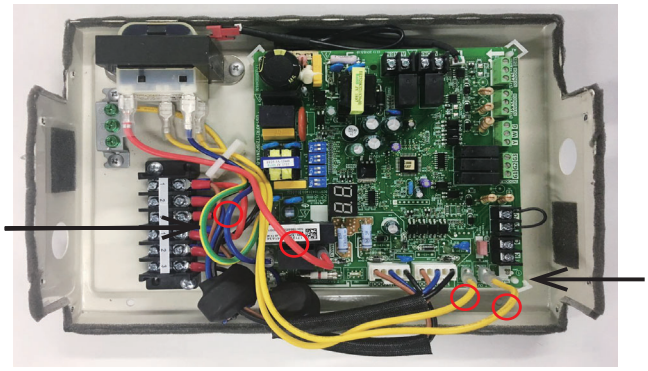

Fig. 12 — Wiring

Control Logic

Table 5 — Conventional Thermostat Connections

Connector	Purpose
R/C	24VAC Output
Y	Cooling
W	Heating
G	Fan
AUX/DRY	Aux/Dry Mode

Table 6 — Mode Setting

Y	W	G	Aux/Dry	Setting Mode
√	X	☆	☆	Cooling
X	√	☆	X	Heating
X	X	√	X	Fan only
√	√	☆	☆	OFF
X	X	X	X	OFF
X	X	☆	√	DRY Mode (on Ductless Systems)

FAN SPEED

For Ductless systems (scenarios 1-3) the fan speed defaults to **AUTO**.

Table 7 — Fan Speed Setting

Unit ON/OFF	G	Setting Fan Speed
√	X	Auto Fan Speed
√	√	Auto Fan Speed
X	X	Fan OFF

LEGEND

√	**ON**
X	**OFF**
☆	**ON or OFF**

DIP SWITCHES CONFIGURATION

The **24V INTERFACE KIT** must be configured to operate properly with the system components with which it is installed. To successfully configure the system, adjust the DIP Switches to match the components and functions used.

NOTE: Properly identify the DIP Switch number marked on the board of the 24V interface as SW1 through SW4 before selecting the options. On each DIP Switch block, the numbers 1 and 2 are marked.

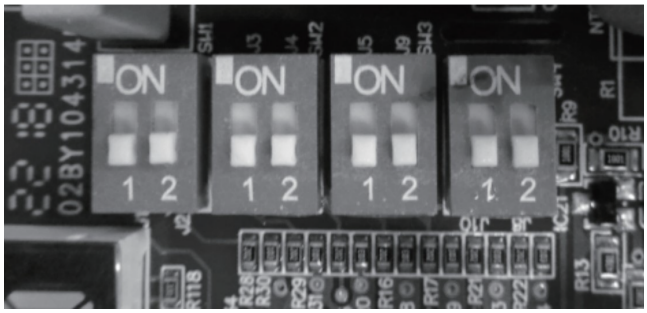

Fig. 19 — DIP Switch Definitions

DIP Switch 1-1

Used to turn **ON** or **OFF** the diagnostic code display LED on the 24V Interface control board (see Fig. 20).

Table 8 — DIP Switch 1-1

SW1-1	Result	Note
ON	Display on	
OFF	Display off	Default

Fig. 20 —LED

DIP Switch 1-2

Use for the indoor unit type selection.

Table 9 — DIP Switch 1-2

SW1-2	Result	Note
ON	Sets - Both Ductless Indoor and Outdoor Units (For Scenarios 1-3)	
OFF	Used on future applications	Default

DIP Switch 2-1

Use for selection of the system: **Cooling Only** or **Heat Pump.**

Table 10 — DIP Switch 2-1

SW2-1	Result	Note
ON	Cooling Only	
OFF	Heat Pump	Default

DIP Switch 2-2

Use for freeze protection of the indoor coil (only available on scenarios 1 through 3).

Table 11 — DIP Switch 2-2

SW2-2	Result	Note
ON	Fan does not stop	
OFF	Fan stops if the indoor coil temperature is low	Default

NOTE: Applicable only to the Ductless Style Indoor Heat Pump units in the **HEATING** mode.

DIP Switch 3-1

On Ductless systems, **Dry** is used with thermostats with a **Dry Function** output.

Table 12 — DIP Switch 3-1

SW3-1	Result	Note
ON	Dry Mode	
OFF	Used on future applications	Default

DIP Switch 3-2

Use to increase the compressor frequency in case the set point has not been reached after 1 hour or 3 hours of operation. The unit keeps operating at **Variable Speed** in both instances.

Table 13 — DIP Switch 3-2

SW3-2	Result	Note
ON	1h	
OFF	3h	Default

DIP Switch 4-1

Not required (planned for future applications). Select the indoor unit's **FAN ONLY** mode.

Table 14 — DIP Switch 4-1

SW4-1	Result	Note
ON	The SW4-2 is available under fan only mode	
OFF	The SW1-2 is available	Default

DIP Switch 4-2

Not required (planned for future applications). Select the indoor unit's fan speed (when selecting DIP switch 4-1).

Table 15 — DIP Switch 4-2

SW4-2	Result	Note
ON	Medium fan speed	
OFF	High fan speed	Default

NOTE: If the SW4-1 is ON, the SW4-2 takes effect, otherwise the SW1-2 takes effect.

ERROR CODES

For ease of service, the 24V Interface is equipped with a diagnostic code display LED on the control board (ensure the 24V interface is installed with the directional arrow pointing up to successfully read the error code). Refer to the indoor or outdoor unit's service manual as listed in Table 16 for a troubleshooting breakdown.

Table 16 — Error Codes

Display	Malfunction and Protection Indication	Service Manual Reference
E0	Indoor EEPROM error	Indoor Service Manual
E2	Cross-zero detection error	Indoor or Outdoor Service Manual
E3	Indoor fan speed malfunction	Indoor Service Manual
E4	Indoor room temperature sensor error	Indoor Service Manual
E5	Evaporator coil temperature sensor error	Indoor Service Manual
EC	Refrigerant leak detection system malfunction	Indoor or Outdoor Service Manual
F0	Current overload protection	Outdoor Service Manual
F1	Outdoor ambient temperature sensor (T4) malfunction	Outdoor Service Manual
F2	Condenser coil temperature sensor (T3) malfunction	Outdoor Service Manual
F3	Condenser coil temperature sensor (T5) malfunction	Outdoor Service Manual
F4	Outdoor unit EEPROM parameter error	Outdoor Service Manual
F5	Outdoor fan speed has been out of control	Outdoor Service Manual
F6	T2b sensor error	Indoor or Outdoor Service Manual
P0	Inverter module (IPM) malfunction	Outdoor Service Manual
P1	Over-voltage or under-voltage protection	Outdoor Service Manual
P2	Compressor top high temperature protection (OLP)	Outdoor Service Manual
P3	Low ambient temperature cut off in heating	Outdoor Service Manual
P4	Compressor drive malfunction	Outdoor Service Manual
--	Mode conflict (when connected to a multi-zone)	Indoor Service Manual
P6	Compressor low-pressure protection	Outdoor Service Manual
IN	24V Interface and indoor unit communication malfunction	Indoor Service Manual (E1)
OU	24V Interface (indoor unit) and outdoor unit communication malfunction	Indoor Service Manual (E1)
00	24V Interface successful power up and in standby	Operational Code
01	System operating in cooling mode	Operational Code
02	System operating in heating mode	Operational Code
03	System operating in fan mode	Operational Code
04	System operating in dehumidify mode (not a recommended application for FV4C units)	Operational Code
05	System operating with Auxiliary heater active (not a recommended application)	Operational Code

WIRING DIAGRAM

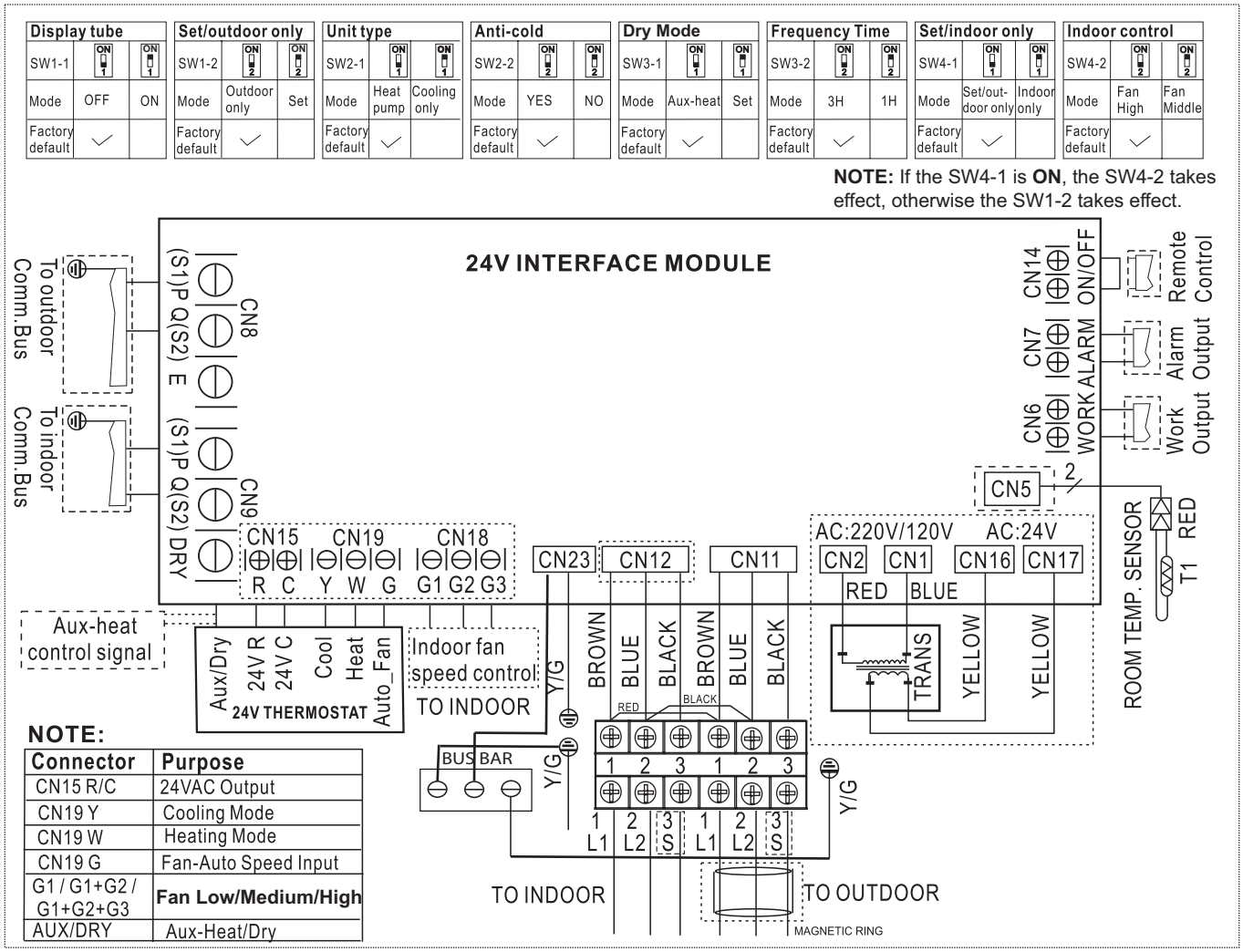

Fig. 21 — Wiring Diagram

GLOSSARY:

- **Remote Control (CN14):** This input may be used to turn the indoor unit on and off remotely by switch or dry contact. If not used, the terminals must have a jumper in place for the unit to operate.
- **Alarm Output (CN7):** This is a dry contact that opens and closes based on the system's alarm status. This is normally a an open dry contact.
- **Work Output (CN6):** This contact is a dry contact that opens and closes based on the system's running or not running condition.When the thermostat calls for Cool (Y), Heat (W), or Fan (G), the contact closes.

FAN OUTPUTS:

- **(G1) Low Fan Speed** (Used on future applications)
- **(G1 + G2) Medium Fan Speed** (Used on future applications)
- **(G1+ G2 + G3) High Fan Speed** (Used on future applications)