Heat Pump Package

14 SEER

2 TO 5TONS

R410A

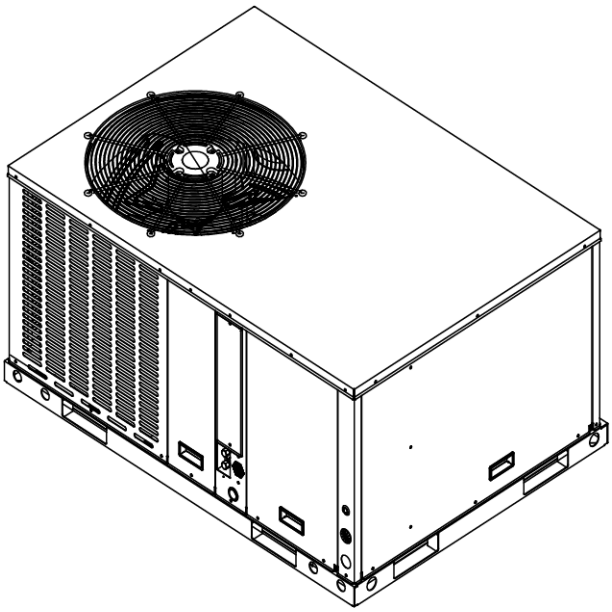

Notes: Appearance of unit may vary.

PRODUCT SPECIFICATIONS 2

COOLING DATA 8

HEATING DATA 14

AHRI RATINGS 20

DIMENSIONS 21

WIRING DIAGRAM 25

AIRFLOW PERFORMANCE DATA 28

ELECTRIC HEATER DATA 39

Standard Features

- Wide-capacity range, 2 to 5 tons.
- Quiet horizontal discharge.
- Architecturally compatible, anti-rust steel cabinets. 1000-hour salt spray tested.
- Electric heat kit available as a field-installed option.
- High-efficiency compressors operate smoothly, quietly, consistently.
- Internal safeguards protect compressor against high pressure, low pressure, coil temperature and power surge.
- Copper tube / aluminum fin coil.
- AHRI certified and ETL listed.

Cabinet Features

- Heavy gauge and galvanized steel cabinet with finish.
- Louvered condenser coil protection.
- Fully insulated blower compartment with convenient access panels.

NOMENCLATURE

M R C – 24 H W N1 – M 14 T

Compressor Brand

T: GMCC **L:** LG

Efficiency

14: 14 SEER

Power Supply

M: 208/230V 1Ph, 60Hz

Refrigerant

N1: R410A

Control Type

W: Wired controller

Function Type

H: Heat pump

Nominal Capacity

24: 24×1,000BTU/H

C Series

Unit Type

R: Roof top

Midea

Model Number		MRC-24HWN1-M14T	MRC-30HWN1-M14T
Electrical			
Power supply	V-Ph-Hz	208/230-1-60	208/230-1-60
Minimum circuit Amp	A	13.7	20.1
Max. overcurrent protection	A	20	30
Cooling			
Capacity	Btu/h	22800	30000
SEER	Btu/h.W	14.0	14.0
Heating			
Capacity	Btu/h	22400	30000
HSPF	Btu/h.W	8.0	8.0
Compressor			
Type		Rotary / GMCC	Rotary / GMCC
RLA-LRA	A	8.45-34.8	12-59.93
Capacitor	µF	50	55
Evaporator motor			
Type		PSC	ECM
Output	HP	1/4	1/2
Capacitor	µF	15	/
RPM	r/min	1075	1075
FLA	A	2.46	4.1
Indoor Nominal CFM (1)	CFM	850	1050
Indoor external static pressure (2)	Inch W.C.(Pa)	0.18(45)	0.23(58)
Evaporator fan			
Material		Metal	Metal
Type		Centrifugal fan	Centrifugal fan
Diameter	inch	10	10
Height	inch	9	9
Evaporator coil			
Rows-F.P.I		4-17	4-17
Fin type		Hydrophilic aluminum	Hydrophilic aluminum
Tube outside Dia. and type	inch	9/32’’ Innergroove tube	9/32’’ Innergroove tube
Condenser motor			
Type		PSC	PSC
Output	HP	1/8	1/6
RPM	r/min	1075	825
FLA	A	0.68	1.0
Capacitor	µF	6	6

Continued:

Model Number		**MRC-24HWN1-M14T**	**MRC-30HWN1-M14T**
Condenser fan			
Material		Metal	Metal
Type		Axial fan	Axial fan
Diameter	inch	22	22
Height	inch	3-3/8	4-7/8
Nominal total CFM	CFM	1960	2565
Condenser coil			
Rows-F.P.I.		2.5-20	2.5-20
Fin type (Code)		Hydrophilic aluminum	Hydrophilic aluminum
Tube outside Dia. and type	inch	9/32" Innergroove tube	9/32" Innergroove tube
Decibels	dB(A)	58.3	61.1
Refrigerant system			
Factory charge (R410A)	lbs-oz	5-1	5-5
Refrigerant control		Orifice	Orifice
Drainage size	NPT	3/4’’	3/4’’
Unit information			
Dimension (W×H×D)	mm	1321×630×958	1321×630×958
	inch	52×24-13/16×37-3/4	52×24-13/16×37-3/4
Packing dimension (W×H×D)	mm	1340×655×970	1340×655×970
	inch	52-3/4×25-7/8×38-1/4	52-3/4×25-7/8×38-1/4
Net / Gross weight	lbs	326/333	346/353
	kg	148/151	157/160
Shipping per STD40HQ		84	84

Notes:

(1) & (2) please see more data from the following airflow performance.

1. Wire size should be determined in accordance with National Electrical Codes; extensive wire runs will require large wire size.

2. Must use time-delay fuses or HACR-type circuit breakers of the same size as noted.

3. Always check the rating plate for electrical data on the unit being installed.

Model		MRC-36HWN1-M14L	MRC-42HWN1-M14L
Electrical			
Power supply	V-Ph-Hz	208/230-1-60	208/230-1-60
Minimum circuit Amp	A	21.4	23.5
Max. overcurrent protection	A	30	30
Cooling			
Capacity	Btu/h	34200	40500
SEER	Btu/h.W	14.0	14.0
Heating			
Capacity	Btu/h	34200	40000
HSPF	Btu/h.W	8.0	8.0
Compressor			
Type		Scroll / LG	Scroll / LG
RLA-LRA	A	13-75	15.2-112.3
Capacitor	µF	45	45
Evaporator motor			
Type		ECM	PSC
Output	HP	1/2	3/4
Capacitor	µF	/	15
RPM	r/min	1075	1075
FLA	A	4.1	2.8
Indoor Nominal CFM (1)	CFM	1220	1400
Indoor external static pressure (2)	Inch W.C.(Pa)	0.23(58)	0.23(58)
Evaporator fan			
material		Metal	Metal
Type		Centrifugal fan	Centrifugal fan
Diameter	inch	10	11
Height	inch	9	10-5/8
Evaporator coil			
Rows-F.P.I.		4-17	4-17
Fin type		Hydrophilic aluminum	Hydrophilic aluminum
Tube outside Dia. and type	inch	9/32’’ Innergroove tube	9/32’’ Innergroove tube
Condenser motor			
Type		PSC	PSC
Output	HP	1/6	1/3
RPM	r/min	825	1075
FLA	A	1.0	1.67
Capacitor	µF	6	15

Continued:

Model		**MRC-36HWN1-M14L**	**MRC-42HWN1-M14L**
Condenser fan			
Material		Metal	Metal
Type		Axial fan	Axial fan
Diameter	inch	22	23-5/8
Height	inch	4-7/8	4-1/2
Nominal total CFM	CFM	2565	3960
Condenser coil			
Rows-F.P.I.		2.5-21	2-21
Fin type (Code)		Hydrophilic aluminum	Hydrophilic aluminum
Tube outside Dia. and type	inch	3/16" Innergroove tube	3/16" Innergroove tube
Decibels	dB(A)	60.9	64
Refrigerant system			
Factory charge (R410A)	lbs-oz	4-14	6-10
Refrigerant control		Orifice	Orifice
Drainage size	NPT	3/4’’	3/4’’
Unit information			
Dimension (W×H×D)	mm	1321×630×958	1486×840×1068
	inch	52×24-13/16×37-3/4	58-1/2×33-1/16×42-1/16
Packing dimension (W×H×D)	mm	1340×655×970	1505×865×1075
	inch	52-3/4×25-7/8×38-1/4	58-1/4×34-1/8×42-3/8
Net / Gross weight	lbs	351/357	463/472
	kg	159/162	210/214
Shipping per STD40HQ		84	48

Notes:

(1) & (2) please see more data from the following airflow performance.

1. Wire size should be determined in accordance with National Electrical Codes; extensive wire runs will require large wire size.
2. Must use time-delay fuses or HACR-type circuit breakers of the same size as noted.
3. Always check the rating plate for electrical data on the unit being installed.

Model		MRC-48HWN1-M14L	MRC-60HWN1-M14L
Electrical			
Power supply	V-Ph-Hz	208/230-1-60	208/230-1-60
Minimum circuit Amp	A	26.9	34.6
Max. overcurrent protection	A	40	50
Cooling			
Capacity	Btu/h	46500	57000
SEER	Btu/h.W	14.0	14.0
Heating			
Capacity	Btu/h	46500	57000
HSPF	Btu/h.W	8.0	8.0
Compressor			
Type		Scroll / LG	Scroll / LG
RLA-LRA	A	17.3-108	21.5-125
Capacitor	µF	70	75
Evaporator motor			
Type		PSC	ECM
Output	HP	3/4	3/4
Capacitor	µF	20	/
RPM	r/min	1075	1075
FLA	A	3.6	6
Indoor Nominal CFM (1)	CFM	1600	2000
Indoor external static pressure (2)	Inch W.C.(Pa)	0.28(70)	0.28(70)
Evaporator fan			
material		Metal	Metal
Type		Centrifugal fan	Centrifugal fan
Diameter	inch	11	11
Height	inch	10-5/8	10-5/8
Evaporator coil			
Rows-F.P.I		4-17	4-17
Fin type		Hydrophilic aluminum	Hydrophilic aluminum
Tube outside Dia. and type	inch	9/32’’ Innergroove tube	9/32’’ Innergroove tube
Condenser motor			
Type		PSC	PSC
Output	HP	1/3	1/3
RPM	r/min	1075	1075
FLA	A	1.67	1.67
Capacitor	µF	15	15

Continued:

Model		**MRC-48HWN1-M14L**	**MRC-60HWN1-M14L**
Condenser fan			
Material		Metal	Metal
Type		Axial fan	Axial fan
Diameter	inch	23-5/8	23-5/8
Height	inch	4-1/2	4-1/2
Nominal total CFM	CFM	3960	3960
Condenser coil			
Rows-F.P.I.		2-21	2.7-20
Fin type (Code)		Hydrophilic aluminum	Hydrophilic aluminum
Tube outside Dia. and type	inch	3/16" Innergroove tube	9/32" Innergroove tube
Decibels	dB(A)	63.8	64.9
Refrigerant system			
Factory charge (R410A)	lb-oz	6-13	8-13
Refrigerant control		Orifice	Orifice
Drainage size	NPT	3/4’’	3/4’’
Unit information			
Dimension (W×H×D)	mm	1486×840×1068	1486×840×1068
	inch	58-1/2×33-1/16×42-1/16	58-1/2×33-1/16×42-1/16
Packing Dimension (W×H×D)	mm	1505×865×1075	1505×865×1075
	inch	58-1/4×34-1/8×42-3/8	58-1/4×34-1/8×42-3/8
Net / Gross weight	lbs	463/472	479/487
	kg	210/214	217/221
Shipping per STD40HQ		48	48

Notes:

(1) & (2) please see more data from the following airflow performance.

1. Wire size should be determined in accordance with National Electrical Codes; extensive wire runs will require large wire size.

2. Must use time-delay fuses or HACR-type circuit breakers of the same size as noted.

3. Always check the rating plate for electrical data on the unit being installed.

MRC-24HWN1-M14T (Cooling)																		
NDOOR AIRFLOW	OUTDOOR DB (°F)	IWB (°F)	59				63				67				71			
		IDB (°F)	70	75	80	85	70	75	80	85	70	75	80	85	70	75	80	85
850 CFM	65	TC	24.6	24.6	24.6	24.6	26.0	26.0	26.0	26.0	27.6	27.6	27.6	27.6	/	29.2	29.2	29.2
		SC	18.7	23.3	24.6	24.6	14.8	19.5	24.2	26.0	10.7	15.4	20.1	24.8	/	11.1	15.8	20.5
		kW	1.43	1.43	1.43	1.43	1.43	1.43	1.43	1.43	1.42	1.42	1.42	1.42	/	1.41	1.41	1.41
	75	TC	23.3	23.3	23.3	23.3	24.8	24.8	24.8	24.8	26.2	26.2	26.2	26.2	/	27.9	27.9	27.9
		SC	18.2	22.8	23.3	23.3	14.1	18.8	23.5	24.8	10.0	14.7	19.4	24.1	/	10.6	15.3	20.1
		kW	1.60	1.60	1.60	1.60	1.60	1.60	1.60	1.60	1.60	1.60	1.60	1.60	/	1.60	1.60	1.60
	82	TC	22.5	22.5	22.5	22.5	23.8	23.8	23.8	23.8	25.4	25.4	25.4	25.4	/	26.8	26.8	26.8
		SC	17.8	22.5	22.5	22.5	13.8	18.3	23.1	23.8	9.6	14.5	19.0	23.9	/	10.2	15.0	19.6
		kW	1.73	1.73	1.73	1.73	1.73	1.73	1.73	1.73	1.73	1.73	1.73	1.73	/	1.74	1.74	1.74
	95	TC	20.1	20.5	20.9	21.3	21.4	21.4	21.8	22.2	22.8	22.8	22.8	23.3	/	24.2	24.2	24.2
		SC	16.5	20.5	20.9	21.3	12.6	18.2	21.8	22.2	8.7	13.2	18.0	22.8	/	9.2	14.0	18.6
		kW	2.01	2.01	2.01	2.01	2.02	2.02	2.02	2.02	2.03	2.03	2.03	2.03	/	2.03	2.03	2.03
	105	TC	18.4	18.4	18.4	18.4	19.5	19.5	19.5	19.5	20.8	20.8	20.8	20.8	/	22.1	22.1	22.1
		SC	15.8	18.4	18.4	18.4	11.9	16.6	19.5	19.5	7.9	12.5	17.2	20.8	/	8.4	13.3	17.9
		kW	2.16	2.16	2.16	2.16	2.17	2.17	2.17	2.17	2.18	2.18	2.18	2.18	/	2.20	2.20	2.20
	115	TC	16.4	16.4	16.4	16.4	17.6	17.6	17.6	17.6	18.7	18.7	18.7	18.7	/	19.9	19.9	19.9
		SC	14.8	16.4	16.4	16.4	10.9	15.6	17.6	17.6	6.9	11.6	16.4	18.7	/	7.6	12.3	17.1
		kW	2.40	2.40	2.40	2.40	2.41	2.41	2.41	2.41	2.43	2.43	2.43	2.43	/	2.44	2.44	2.44

Notes:

TC: Total capacity; **SC:** Sensible capacity; **kW:** Total input power.

MRC-30HWN1-M14T (Cooling)																		
NDOOR AIRFLOW	OUTDOOR DB (°F)	IWB (°F)	59				63				67				71			
		IDB (°F)	70	75	80	85	70	75	80	85	70	75	80	85	70	75	80	85
1050 CFM	65	TC	33.1	33.1	33.1	33.1	35.1	35.1	35.1	35.1	37.2	37.2	37.2	37.2	/	39.4	39.4	39.4
		SC	24.5	30.2	33.1	33.1	19.7	25.3	31.3	35.1	14.5	20.1	26.1	32.0	/	15.0	20.9	26.8
		kW	1.99	1.99	1.99	1.99	1.98	1.98	1.98	1.98	1.97	1.97	1.97	1.97	/	1.96	1.96	1.96
	75	TC	31.5	31.5	31.5	31.5	33.5	33.5	33.5	33.5	35.5	35.5	35.5	35.5	/	37.6	37.6	37.6
		SC	23.6	29.6	31.5	31.5	18.7	24.4	30.5	33.5	13.8	19.5	25.2	31.2	/	14.3	20.3	25.9
		kW	2.23	2.23	2.23	2.23	2.22	2.22	2.22	2.22	2.22	2.22	2.22	2.22	/	2.22	2.22	2.22
	82	TC	30.3	30.3	30.3	30.3	32.2	32.2	32.2	32.2	34.2	34.2	34.2	34.2	/	36.3	36.3	36.3
		SC	23.0	28.8	30.3	30.3	18.4	23.8	29.6	32.2	13.3	19.2	24.6	30.4	/	13.8	19.6	25.4
		kW	2.33	2.33	2.33	2.33	2.33	2.33	2.33	2.33	2.34	2.34	2.34	2.34	/	2.34	2.34	2.34
	95	TC	26.8	27.3	27.8	28.4	28.6	28.6	29.2	29.8	30.4	30.4	30.4	31.0	/	32.3	32.3	32.3
		SC	21.4	27.3	27.8	28.4	16.6	23.5	28.3	29.8	11.6	17.3	23.1	29.1	/	12.3	18.1	23.9
		kW	2.72	2.72	2.72	2.72	2.73	2.73	2.73	2.73	2.74	2.74	2.74	2.74	/	2.74	2.74	2.74
	105	TC	23.9	23.9	23.9	23.9	25.5	25.5	25.5	25.5	27.2	27.2	27.2	27.2	/	28.9	28.9	28.9
		SC	20.1	23.9	23.9	23.9	15.3	20.9	25.5	25.5	10.3	16.0	21.7	27.2	/	11.0	16.8	22.5
		kW	3.01	3.01	3.01	3.01	3.02	3.02	3.02	3.02	3.04	3.04	3.04	3.04	/	3.06	3.06	3.06
	115	TC	21.4	21.4	21.4	21.4	22.8	22.8	22.8	22.8	24.4	24.4	24.4	24.4	/	26.0	26.0	26.0
		SC	18.8	21.4	21.4	21.4	13.9	19.9	22.8	22.8	9.3	14.9	20.7	24.4	/	9.9	15.8	21.5
		kW	3.34	3.34	3.34	3.34	3.36	3.36	3.36	3.36	3.38	3.38	3.38	3.38	/	3.40	3.40	3.40

Notes:

TC: Total capacity; **SC:** Sensible capacity; **kW:** Total input power.

MRC-36HWN1-M14L (Cooling)																		
NDOOR AIRFLOW	OUTDOOR DB (°F)	IWB (°F)	59				63				67				71			
		IDB (°F)	70	75	80	85	70	75	80	85	70	75	80	85	70	75	80	85
1220 CFM	65	TC	36.8	36.8	36.8	36.8	39.0	39.0	39.0	39.0	41.3	41.3	41.3	41.3	/	43.8	43.8	43.8
		SC	27.6	34.3	36.8	36.8	21.9	28.5	35.5	39.0	16.1	22.7	29.3	36.3	/	16.6	23.6	30.2
		kW	2.19	2.19	2.19	2.19	2.18	2.18	2.18	2.18	2.17	2.17	2.17	2.17	/	2.16	2.16	2.16
	75	TC	34.9	34.9	34.9	34.9	37.1	37.1	37.1	37.1	39.3	39.3	39.3	39.3	/	41.7	41.7	41.7
		SC	26.9	33.5	34.9	34.9	21.1	27.8	34.5	37.1	15.3	22.0	28.7	35.4	/	15.8	22.5	29.6
		kW	2.44	2.44	2.44	2.44	2.44	2.44	2.44	2.44	2.44	2.44	2.44	2.44	/	2.44	2.44	2.44
	82	TC	33.9	33.9	33.9	33.9	36.1	36.1	36.1	36.1	38.2	38.2	38.2	38.2	/	40.5	40.5	40.5
		SC	26.1	32.8	33.9	33.9	20.6	27.4	33.9	36.1	14.5	21.4	28.3	34.8	/	15.4	22.3	29.2
		kW	2.63	2.63	2.63	2.63	2.63	2.63	2.63	2.63	2.63	2.63	2.63	2.63	/	2.64	2.64	2.64
	95	TC	30.2	30.8	31.4	32.0	32.2	32.2	32.8	33.5	34.2	34.2	34.2	34.9	/	36.3	36.3	36.3
		SC	24.5	30.8	31.4	32.0	18.7	26.7	32.5	33.5	13.0	19.8	26.3	33.5	/	13.8	20.7	27.2
		kW	3.01	3.01	3.01	3.01	3.02	3.02	3.02	3.02	3.03	3.03	3.03	3.03	/	3.03	3.03	3.03
	105	TC	27.2	27.2	27.2	27.2	29.1	29.1	29.1	29.1	31.0	31.0	31.0	31.0	/	32.9	32.9	32.9
		SC	23.1	27.2	27.2	27.2	17.4	24.1	29.1	29.1	11.8	18.3	25.1	31.0	/	12.5	19.4	26.0
		kW	3.30	3.30	3.30	3.30	3.32	3.32	3.32	3.32	3.34	3.34	3.34	3.34	/	3.36	3.36	3.36
	115	TC	24.4	24.4	24.4	24.4	26.1	26.1	26.1	26.1	27.8	27.8	27.8	27.8	/	29.6	29.6	29.6
		SC	21.7	24.4	24.4	24.4	16.2	23.0	26.1	26.1	10.3	17.2	23.9	27.8	/	11.3	18.1	24.9
		kW	3.67	3.67	3.67	3.67	3.69	3.69	3.69	3.69	3.71	3.71	3.71	3.71	/	3.73	3.73	3.73

Notes:

TC: Total capacity; **SC:** Sensible capacity; **kW:** Total input power.

MRC-42HWN1-M14L (Cooling)																		
NDOOR AIRFLOW	OUTDOOR DB (°F)	IWB (°F)	59				63				67				71			
		IDB (°F)	70	75	80	85	70	75	80	85	70	75	80	85	70	75	80	85
1400 CFM	65	TC	44.6	44.6	44.6	44.6	47.3	47.3	47.3	47.3	50.1	50.1	50.1	50.1	/	53.1	53.1	53.1
		SC	33.0	40.6	44.6	44.6	26.5	34.1	41.7	47.3	19.5	27.0	35.1	42.6	/	20.2	28.1	36.1
		kW	2.53	2.53	2.53	2.53	2.52	2.52	2.52	2.52	2.50	2.50	2.50	2.50	/	2.49	2.49	2.49
	75	TC	42.4	42.4	42.4	42.4	44.9	44.9	44.9	44.9	47.7	47.7	47.7	47.7	/	50.5	50.5	50.5
		SC	31.8	39.4	42.4	42.4	25.1	32.8	40.4	44.9	18.6	26.2	33.8	41.5	/	19.2	27.3	34.9
		kW	2.83	2.83	2.83	2.83	2.82	2.82	2.82	2.82	2.82	2.82	2.82	2.82	/	2.82	2.82	2.82
	82	TC	40.8	40.8	40.8	40.8	43.3	43.3	43.3	43.3	46.0	46.0	46.0	46.0	/	48.8	48.8	48.8
		SC	31.0	38.7	40.8	40.8	24.3	32.1	39.8	43.3	17.9	25.3	33.1	40.9	/	18.6	26.4	34.2
		kW	3.11	3.11	3.11	3.11	3.11	3.11	3.11	3.11	3.11	3.11	3.11	3.11	/	3.12	3.12	3.12
	95	TC	35.8	36.5	37.2	37.9	38.1	38.1	38.9	39.7	40.5	40.5	40.5	41.3	/	43.0	43.0	43.0
		SC	28.6	36.5	37.2	37.9	22.1	31.2	37.7	39.7	15.4	23.1	30.8	38.8	/	16.3	24.1	31.8
		kW	3.46	3.46	3.46	3.46	3.47	3.47	3.47	3.47	3.49	3.49	3.49	3.49	/	3.49	3.49	3.49
	105	TC	32.9	32.9	32.9	32.9	35.1	35.1	35.1	35.1	37.4	37.4	37.4	37.4	/	39.7	39.7	39.7
		SC	27.3	32.9	32.9	32.9	20.7	28.4	35.1	35.1	14.2	22.1	29.5	37.4	/	15.1	23.0	30.6
		kW	3.82	3.82	3.82	3.82	3.84	3.84	3.84	3.84	3.86	3.86	3.86	3.86	/	3.88	3.88	3.88
	115	TC	29.7	29.7	29.7	29.7	31.7	31.7	31.7	31.7	33.8	33.8	33.8	33.8	/	36.0	36.0	36.0
		SC	25.8	29.7	29.7	29.7	19.3	26.9	31.7	31.7	12.8	20.3	28.0	33.8	/	13.7	21.6	29.1
		kW	4.25	4.25	4.25	4.25	4.26	4.26	4.26	4.26	4.29	4.29	4.29	4.29	/	4.32	4.32	4.32

Notes:

TC: Total capacity; **SC:** Sensible capacity; **kW:** Total input power.

MRC-48HWN1-M14L (Cooling)																		
NDOOR AIRFLOW	OUTDOOR DB (°F)	IWB (°F)	59				63				67				71			
		IDB (°F)	70	75	80	85	70	75	80	85	70	75	80	85	70	75	80	85
1600 CFM	65	TC	50.4	50.4	50.4	50.4	53.5	53.5	53.5	53.5	56.6	56.6	56.6	56.6	/	59.9	59.9	59.9
		SC	37.3	45.9	50.4	50.4	29.9	38.5	47.6	53.5	22.1	31.1	39.6	48.7	/	22.8	31.8	40.7
		kW	2.97	2.97	2.97	2.97	2.95	2.95	2.95	2.95	2.94	2.94	2.94	2.94	/	2.92	2.92	2.92
	75	TC	47.8	47.8	47.8	47.8	50.7	50.7	50.7	50.7	53.9	53.9	53.9	53.9	/	57.1	57.1	57.1
		SC	35.9	45.0	47.8	47.8	28.4	37.6	46.2	50.7	21.0	29.6	38.2	47.4	/	21.7	30.8	39.4
		kW	3.31	3.31	3.31	3.31	3.31	3.31	3.31	3.31	3.31	3.31	3.31	3.31	/	3.31	3.31	3.31
	82	TC	46.4	46.4	46.4	46.4	49.4	49.4	49.4	49.4	52.4	52.4	52.4	52.4	/	55.5	55.5	55.5
		SC	35.3	44.1	46.4	46.4	27.6	36.5	45.4	49.4	20.4	28.8	37.7	46.6	/	21.1	30.0	38.9
		kW	3.56	3.56	3.56	3.56	3.56	3.56	3.56	3.56	3.57	3.57	3.57	3.57	/	3.58	3.58	3.58
	95	TC	41.1	41.9	42.7	43.6	43.7	43.7	44.6	45.5	46.5	46.5	46.5	47.4	/	49.4	49.4	49.4
		SC	32.9	41.9	42.7	43.6	25.3	35.8	43.3	45.5	17.7	26.5	35.3	44.6	/	18.8	27.7	36.6
		kW	4.01	4.01	4.01	4.01	4.02	4.02	4.02	4.02	4.04	4.04	4.04	4.04	/	4.04	4.04	4.04
	105	TC	38.3	38.3	38.3	38.3	40.9	40.9	40.9	40.9	43.5	43.5	43.5	43.5	/	46.3	46.3	46.3
		SC	31.4	38.3	38.3	38.3	24.1	32.7	40.9	40.9	16.5	25.2	34.4	43.0	/	17.6	26.4	35.2
		kW	4.48	4.48	4.48	4.48	4.50	4.50	4.50	4.50	4.52	4.52	4.52	4.52	/	4.55	4.55	4.55
	115	TC	34.2	34.2	34.2	34.2	36.5	36.5	36.5	36.5	39.0	39.0	39.0	39.0	/	41.5	41.5	41.5
		SC	29.4	34.2	34.2	34.2	22.3	31.0	36.5	36.5	14.8	23.4	32.4	39.0	/	15.8	24.9	33.6
		kW	4.98	4.98	4.98	4.98	5.00	5.00	5.00	5.00	5.03	5.03	5.03	5.03	/	5.06	5.06	5.06

Notes:

TC: Total capacity; **SC:** Sensible capacity; **kW:** Total input power.

MRC-60HWN1-M14L (Cooling)																		
NDOOR AIRFLOW	OUTDOOR DB (°F)	IWB (°F)	59				63				67				71			
		IDB (°F)	70	75	80	85	70	75	80	85	70	75	80	85	70	75	80	85
2000 CFM	65	TC	62.4	62.4	62.4	62.4	66.2	66.2	66.2	66.2	70.1	70.1	70.1	70.1	/	74.2	74.2	74.2
		SC	46.2	57.4	62.4	62.4	37.1	47.7	58.9	66.2	27.4	38.6	49.1	60.3	/	28.2	39.3	50.5
		kW	3.60	3.60	3.60	3.60	3.58	3.58	3.58	3.58	3.56	3.56	3.56	3.56	/	3.54	3.54	3.54
	75	TC	59.2	59.2	59.2	59.2	62.9	62.9	62.9	62.9	66.7	66.7	66.7	66.7	/	70.7	70.7	70.7
		SC	45.0	55.6	59.2	59.2	35.2	46.5	57.2	62.9	26.0	36.7	48.0	58.7	/	26.8	38.2	49.5
		kW	4.02	4.02	4.02	4.02	4.02	4.02	4.02	4.02	4.01	4.01	4.01	4.01	/	4.01	4.01	4.01
	82	TC	56.4	56.4	56.4	56.4	60.0	60.0	60.0	60.0	63.6	63.6	63.6	63.6	/	67.6	67.6	67.6
		SC	43.4	54.2	56.4	56.4	34.2	45.0	56.4	60.0	24.8	35.6	46.4	57.9	/	25.7	37.2	48.0
		kW	4.30	4.30	4.30	4.30	4.30	4.30	4.30	4.30	4.31	4.31	4.31	4.31	/	4.32	4.32	4.32
	95	TC	50.3	51.3	52.3	53.3	53.6	53.6	54.7	55.8	57.0	57.0	57.0	58.1	/	60.6	60.6	60.6
		SC	40.2	51.3	52.3	53.3	31.1	44.5	53.6	55.8	21.7	32.5	43.9	55.2	/	23.0	33.9	45.5
		kW	4.91	4.91	4.91	4.91	4.93	4.93	4.93	4.93	4.95	4.95	4.95	4.95	/	4.95	4.95	4.95
	105	TC	47.3	47.3	47.3	47.3	50.5	50.5	50.5	50.5	53.8	53.8	53.8	53.8	/	57.2	57.2	57.2
		SC	38.8	47.3	47.3	47.3	29.8	40.9	50.5	50.5	20.4	31.2	42.5	53.8	/	21.7	33.2	44.0
		kW	5.43	5.43	5.43	5.43	5.46	5.46	5.46	5.46	5.48	5.48	5.48	5.48	/	5.52	5.52	5.52
	115	TC	42.3	42.3	42.3	42.3	45.2	45.2	45.2	45.2	48.2	48.2	48.2	48.2	/	51.2	51.2	51.2
		SC	36.8	42.3	42.3	42.3	27.5	38.4	45.2	45.2	18.3	28.9	40.0	48.2	/	19.5	30.7	41.5
		kW	6.04	6.04	6.04	6.04	6.07	6.07	6.07	6.07	6.10	6.10	6.10	6.10	/	6.14	6.14	6.14

Notes:

TC: Total capacity; **SC:** Sensible capacity; **kW:** Total input power.

MRC-24HWN1-M14T (Heating)									
CFM	HEATING PERFORMANCE AT INDOOR DRY BULB TEMPERATURE (°F)								
	OD (°F)	TOTAL CAPACITY MBH.				TOTAL POWER IN KILOWATTS			
		60	70	75	80	60	70	75	80
850	2	5.8	5.6	5.5	5.4	1.27	1.33	1.35	1.38
	7	7.7	7.5	7.4	7.3	1.31	1.37	1.40	1.43
	12	9.5	9.3	9.2	9.1	1.35	1.42	1.45	1.48
	17	11.4	11.2	11.1	11.0	1.40	1.47	1.50	1.53
	22	12.9	12.6	12.5	12.3	1.43	1.50	1.54	1.57
	27	14.3	14.0	13.9	13.7	1.47	1.54	1.58	1.61
	32	15.6	15.2	15.1	14.9	1.50	1.58	1.62	1.66
	37	17.5	17.1	16.9	16.7	1.56	1.64	1.67	1.71
	42	20.0	19.6	19.4	19.3	1.61	1.69	1.73	1.77
	47	22.8	22.4	22.2	22.0	1.66	1.75	1.79	1.83
	52	24.7	24.3	24.0	23.8	1.71	1.79	1.84	1.88
	57	26.6	26.1	25.9	25.7	1.75	1.84	1.88	1.93
	62	28.5	28.0	27.8	27.5	1.79	1.89	1.93	1.98
	67	30.4	29.9	29.6	29.3	1.84	1.93	1.98	2.03
	72	32.3	31.7	31.5	31.2	1.88	1.98	2.03	2.08

MRC-30HWN1-M14T (Heating)									
CFM	HEATING PERFORMANCE AT INDOOR DRY BULB TEMPERATURE (°F)								
	OD (°F)	TOTAL CAPACITY MBH.				TOTAL POWER IN KILOWATTS			
		60	70	75	80	60	70	75	80
1050	2	11.8	11.6	11.4	11.3	2.27	2.35	2.39	2.43
	7	13.8	13.6	13.5	13.4	2.27	2.35	2.39	2.43
	12	15.9	15.7	15.5	15.4	2.28	2.35	2.39	2.43
	17	18.0	17.7	17.5	17.4	2.28	2.36	2.40	2.44
	22	19.5	19.2	19.0	18.8	2.27	2.35	2.39	2.43
	27	21.0	20.6	20.4	20.2	2.26	2.34	2.38	2.42
	32	22.2	21.8	21.5	21.3	2.25	2.33	2.37	2.41
	37	24.3	23.8	23.6	23.3	2.27	2.35	2.39	2.43
	42	27.3	26.8	26.5	26.2	2.28	2.36	2.40	2.44
	47	30.6	30.0	29.7	29.4	2.30	2.38	2.42	2.46
	52	32.6	32.1	31.8	31.5	2.30	2.38	2.42	2.46
	57	34.7	34.1	33.8	33.5	2.30	2.38	2.42	2.46
	62	36.8	36.2	35.8	35.5	2.30	2.39	2.43	2.47
	67	38.9	38.2	37.8	37.5	2.31	2.39	2.43	2.47
	72	41.0	40.3	39.9	39.5	2.31	2.39	2.43	2.47

MRC-36HWN1-M14L (Heating)									
CFM	HEATING PERFORMANCE AT INDOOR DRY BULB TEMPERATURE (°F)								
	OD (°F)	TOTAL CAPACITY MBH.				TOTAL POWER IN KILOWATTS			
		60	70	75	80	60	70	75	80
1220	2	11.6	11.4	11.3	11.2	2.26	2.35	2.40	2.44
	7	14.2	13.9	13.8	13.7	2.29	2.38	2.43	2.47
	12	16.8	16.5	16.3	16.1	2.32	2.41	2.46	2.50
	17	19.4	19.0	18.8	18.6	2.35	2.44	2.49	2.54
	22	21.3	20.8	20.6	20.4	2.36	2.46	2.51	2.55
	27	23.2	22.7	22.5	22.2	2.38	2.48	2.52	2.57
	32	24.7	24.2	24.0	23.7	2.40	2.49	2.54	2.59
	37	27.3	26.7	26.5	26.2	2.44	2.54	2.59	2.64
	42	30.9	30.3	30.0	29.7	2.48	2.58	2.63	2.68
	47	34.8	34.2	33.9	33.6	2.52	2.62	2.68	2.73
	52	37.4	36.7	36.4	36.1	2.55	2.65	2.71	2.76
	57	40.0	39.3	38.9	38.6	2.58	2.68	2.74	2.79
	62	42.6	41.8	41.4	41.0	2.61	2.71	2.77	2.82
	67	45.1	44.3	43.9	43.5	2.63	2.74	2.80	2.86
	72	47.7	46.9	46.4	46.0	2.66	2.78	2.83	2.89

MRC-42HWN1-M14L (Heating)									
CFM	HEATING PERFORMANCE AT INDOOR DRY BULB TEMPERATURE (°F)								
	OD (°F)	TOTAL CAPACITY MBH.				TOTAL POWER IN KILOWATTS			
		60	70	75	80	60	70	75	80
1400	2	12.4	12.1	12.0	11.8	2.33	2.44	2.49	2.54
	7	15.5	15.2	15.0	14.9	2.41	2.53	2.58	2.64
	12	18.7	18.3	18.1	17.9	2.49	2.61	2.67	2.73
	17	21.8	21.4	21.2	21.0	2.58	2.70	2.77	2.83
	22	24.2	23.7	23.5	23.2	2.65	2.78	2.84	2.91
	27	26.5	26.0	25.7	25.5	2.71	2.85	2.92	2.99
	32	28.5	27.9	27.6	27.3	2.78	2.92	2.99	3.06
	37	31.6	31.0	30.7	30.4	2.88	3.03	3.10	3.17
	42	36.0	35.3	35.0	34.6	2.98	3.13	3.21	3.29
	47	40.7	40.0	39.6	39.3	3.08	3.24	3.32	3.40
	52	43.9	43.1	42.7	42.3	3.16	3.33	3.41	3.49
	57	47.0	46.2	45.8	45.4	3.25	3.42	3.50	3.59
	62	50.2	49.3	48.9	48.4	3.33	3.51	3.59	3.68
	67	53.3	52.4	51.9	51.5	3.42	3.60	3.69	3.77
	72	56.5	55.5	55.0	54.5	3.50	3.68	3.78	3.87

MRC-48HWN1-M14L (Heating)									
CFM	HEATING PERFORMANCE AT INDOOR DRY BULB TEMPERATURE (°F)								
	OD (°F)	TOTAL CAPACITY MBH.				TOTAL POWER IN KILOWATTS			
		60	70	75	80	60	70	75	80
1600	2	16.7	16.4	16.2	16.0	3.10	3.22	3.28	3.35
	7	20.1	19.7	19.5	19.3	3.15	3.27	3.33	3.40
	12	23.5	23.1	22.8	22.6	3.19	3.32	3.38	3.44
	17	26.9	26.4	26.2	25.9	3.23	3.36	3.43	3.49
	22	29.4	28.8	28.5	28.3	3.26	3.39	3.46	3.53
	27	31.9	31.2	30.9	30.6	3.29	3.42	3.49	3.56
	32	33.9	33.2	32.9	32.5	3.31	3.45	3.52	3.59
	37	37.3	36.5	36.2	35.8	3.37	3.51	3.58	3.66
	42	42.1	41.3	40.9	40.5	3.43	3.58	3.65	3.72
	47	47.4	46.5	46.1	45.6	3.50	3.64	3.72	3.79
	52	50.8	49.9	49.4	48.9	3.54	3.69	3.77	3.84
	57	54.2	53.2	52.7	52.2	3.58	3.74	3.81	3.89
	62	57.6	56.6	56.0	55.5	3.63	3.78	3.86	3.94
	67	61.0	59.9	59.4	58.8	3.67	3.83	3.91	3.99
	72	64.4	63.3	62.7	62.1	3.72	3.88	3.96	4.04

MRC-60HWN1-M14L (Heating)									
CFM	HEATING PERFORMANCE AT INDOOR DRY BULB TEMPERATURE (°F)								
	OD (°F)	TOTAL CAPACITY MBH.				TOTAL POWER IN KILOWATTS			
		60	70	75	80	60	70	75	80
2000	2	18.4	18.0	17.8	17.6	3.36	3.50	3.58	3.65
	7	22.8	22.3	22.1	21.9	3.45	3.61	3.69	3.76
	12	27.2	26.7	26.4	26.1	3.55	3.71	3.79	3.88
	17	31.6	31.0	30.7	30.4	3.65	3.82	3.90	3.99
	22	34.9	34.2	33.9	33.5	3.72	3.90	3.99	4.07
	27	38.1	37.4	37.0	36.6	3.80	3.98	4.07	4.16
	32	40.8	40.0	39.6	39.2	3.88	4.06	4.16	4.25
	37	45.2	44.3	43.9	43.4	4.00	4.19	4.29	4.38
	42	51.4	50.4	49.9	49.4	4.12	4.32	4.42	4.52
	47	58.0	57.0	56.5	56.0	4.24	4.44	4.55	4.65
	52	62.5	61.3	60.8	60.2	4.33	4.55	4.65	4.76
	57	66.9	65.7	65.1	64.5	4.43	4.65	4.76	4.87
	62	71.3	70.0	69.4	68.7	4.53	4.76	4.87	4.98
	67	75.7	74.3	73.7	73.0	4.63	4.86	4.98	5.09
	72	80.1	78.7	78.0	77.3	4.73	4.96	5.08	5.20

UNIT	CFM	COOLING RATINGS			HEATING RATINGS		AHRI#
		HighCool[1]	EER[2]	SEER[3]	HighHeat[4]	HSPF[5]	
MRC-24HWN1-M14T	850	22800	11	14	22400	8	8377396
MRC-30HWN1-M14T	1050	30000	11	14	30000	8	8377397
MRC-36HWN1-M14L	1220	34200	11	14	34200	8	8377398
MRC-42HWN1-M14L	1400	40500	11.5	14	40000	8	8377399
MRC-48HWN1-M14L	1600	46500	11.5	14	46500	8	8377400
MRC-60HWN1-M14L	2000	57000	11.5	14	57000	8	8377401

1. Cooling capacity @95°F [BTU/h];
2. Energy Efficiency Ratio @ 95°F;
3. Seasonal Energy Efficiency Ratio;
4. Heating Capacity @47°F [BTU/h];
5. Heating Seasonal Performance Factor.

Notes:

- Always check the rating plate for electrical data on the unit being installed.
- The above data are for reference only, specific to the AHRI official inquiries shall prevail.

Component location:

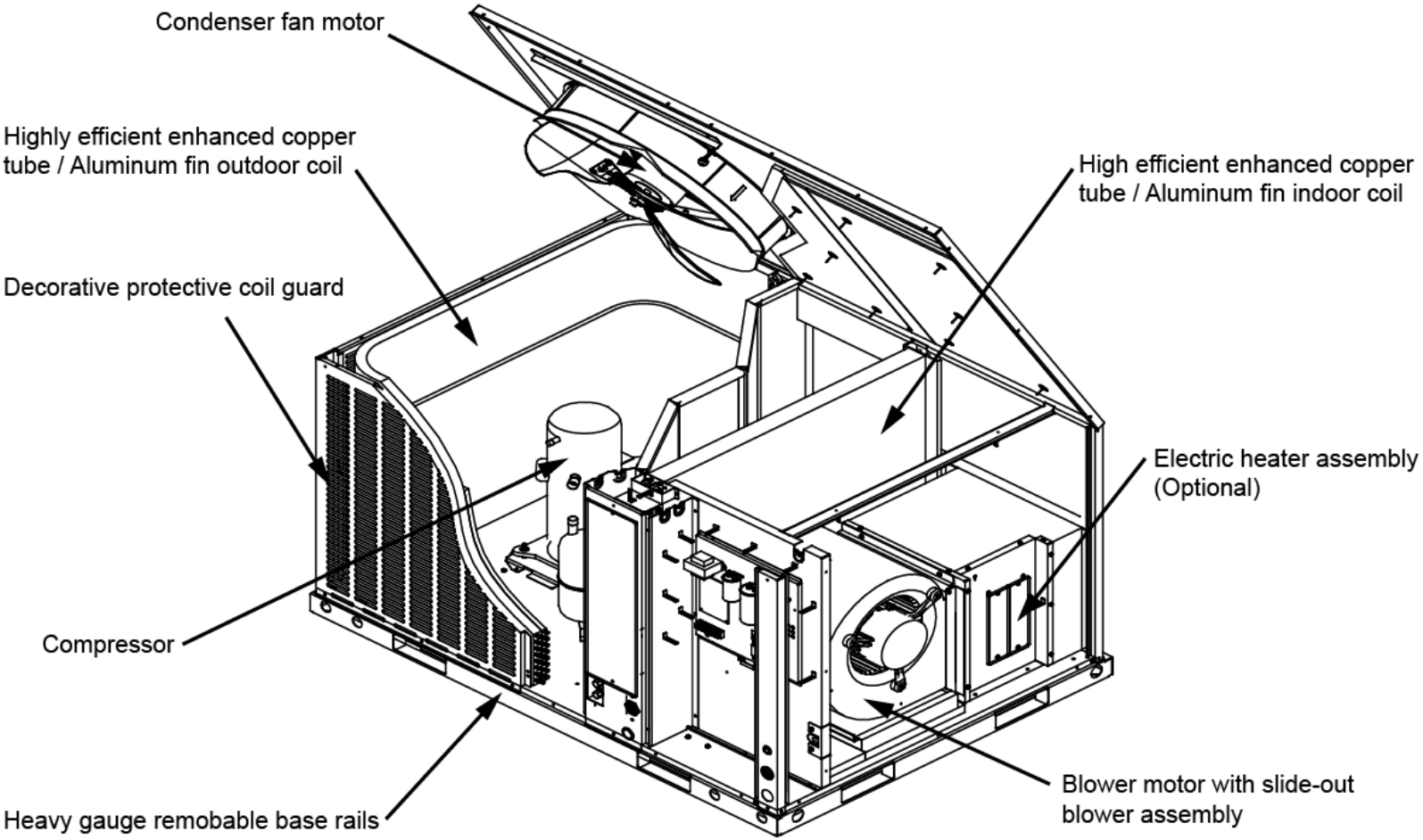

The above figure is only for reference purpose.

MRC-24HWN1-M14T, MRC-30HWN1-M14T, MRC-36HWN1-M14L:

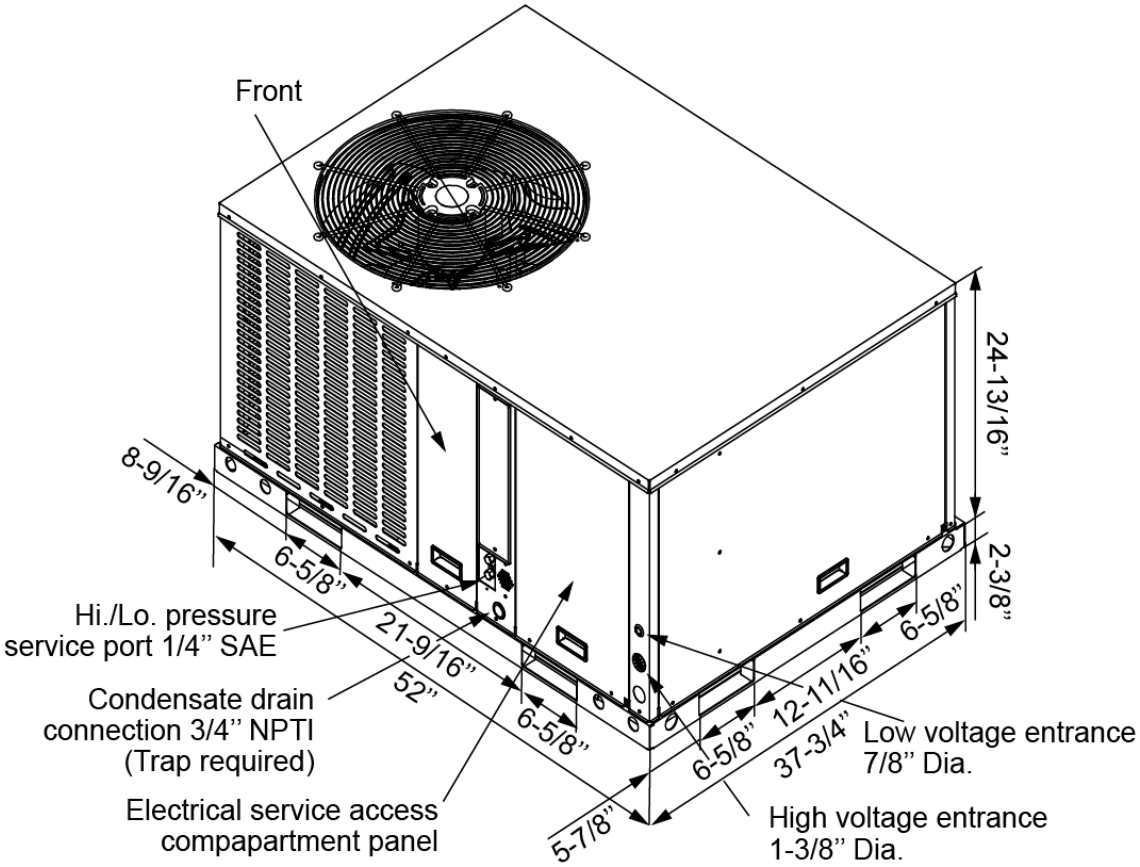

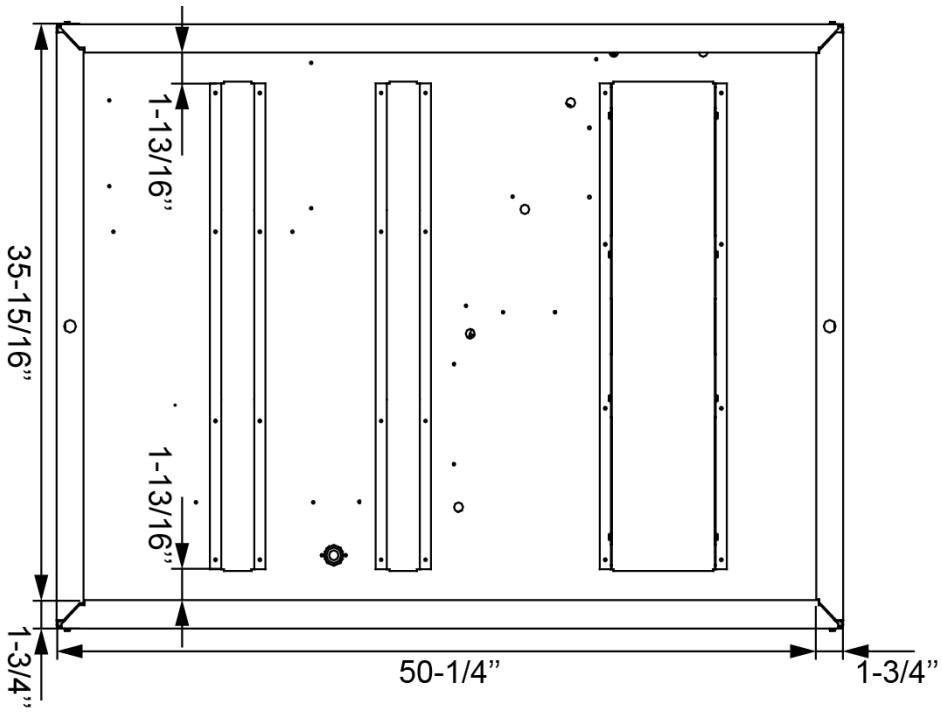

Bottom View

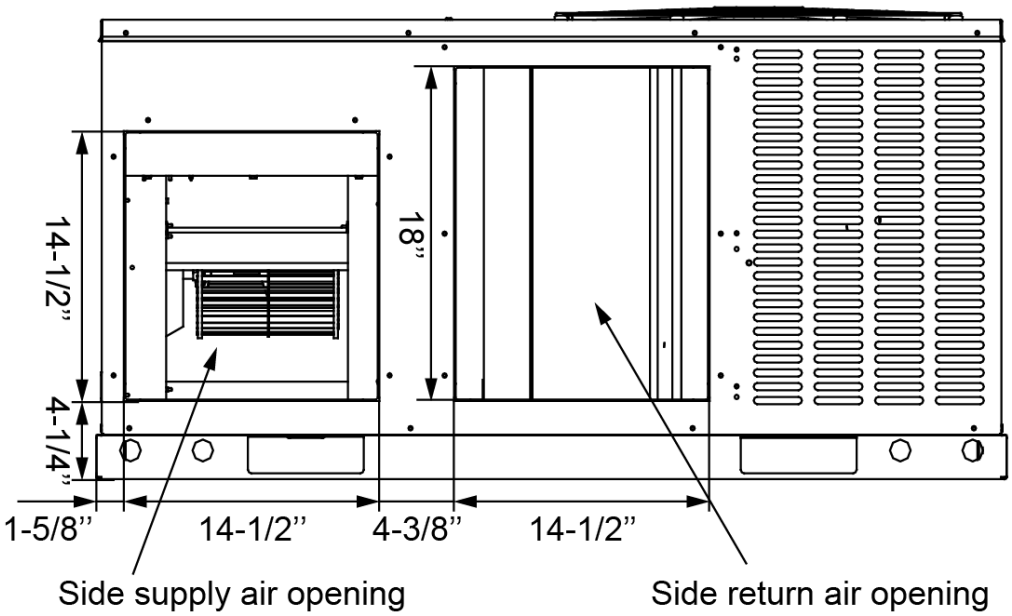

Back View

MRC-42HWN1-M14L, MRC-48HWN1-M14L, MRC-60HWN1-M14L:

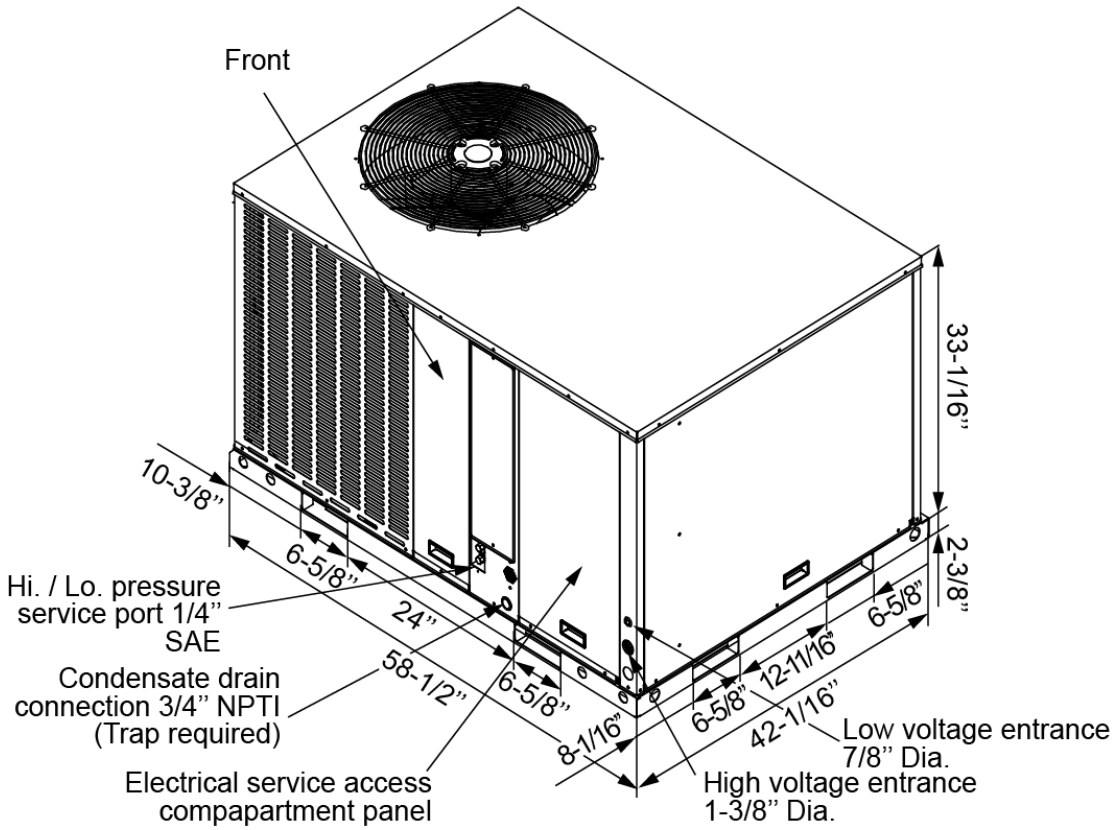

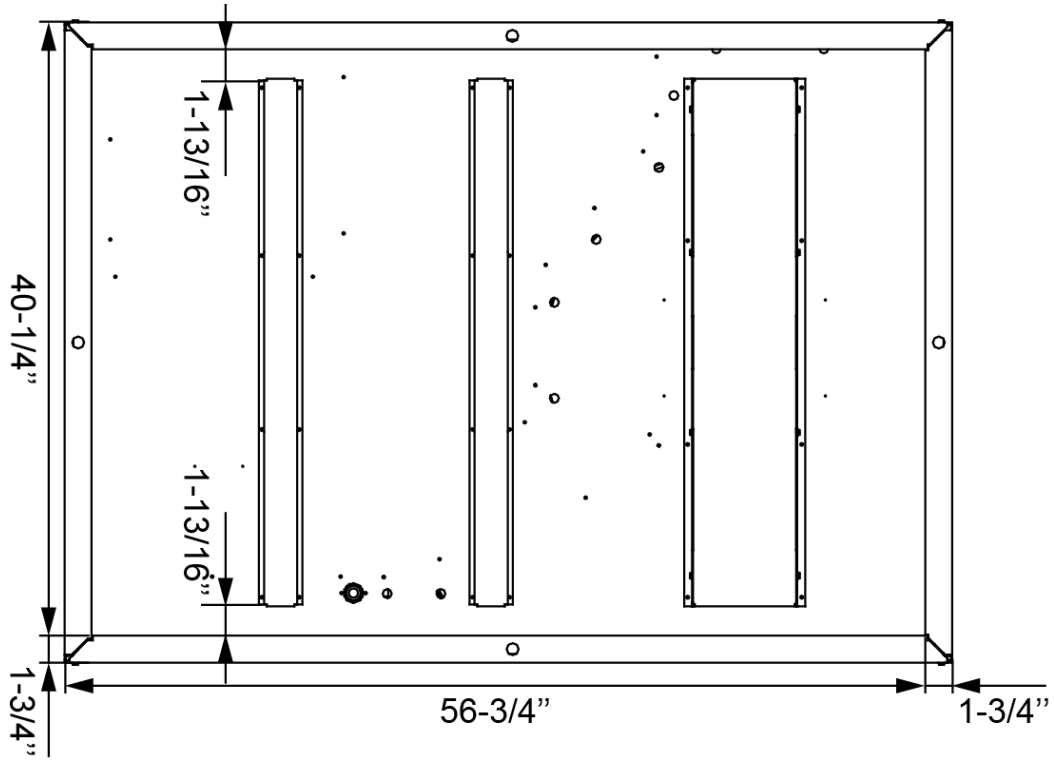

Bottom View

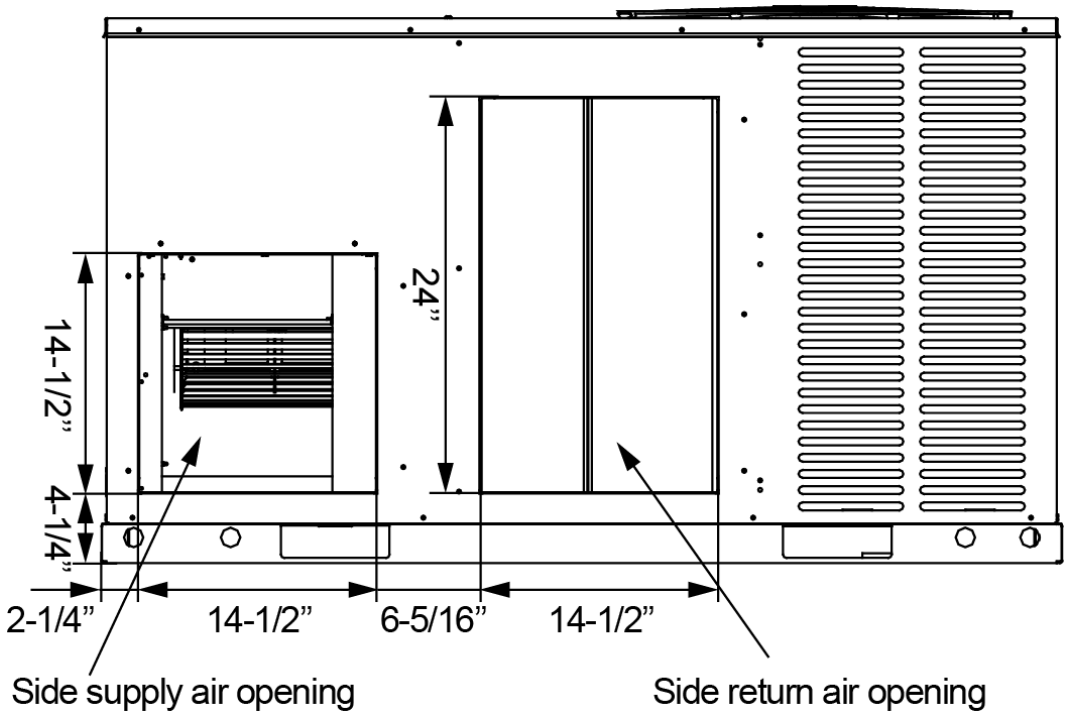

Back View

Wiring diagram:

MRC-24HWN1-M14T, MRC-42HWN1-M14L, MRC-48HWN1-M14L:

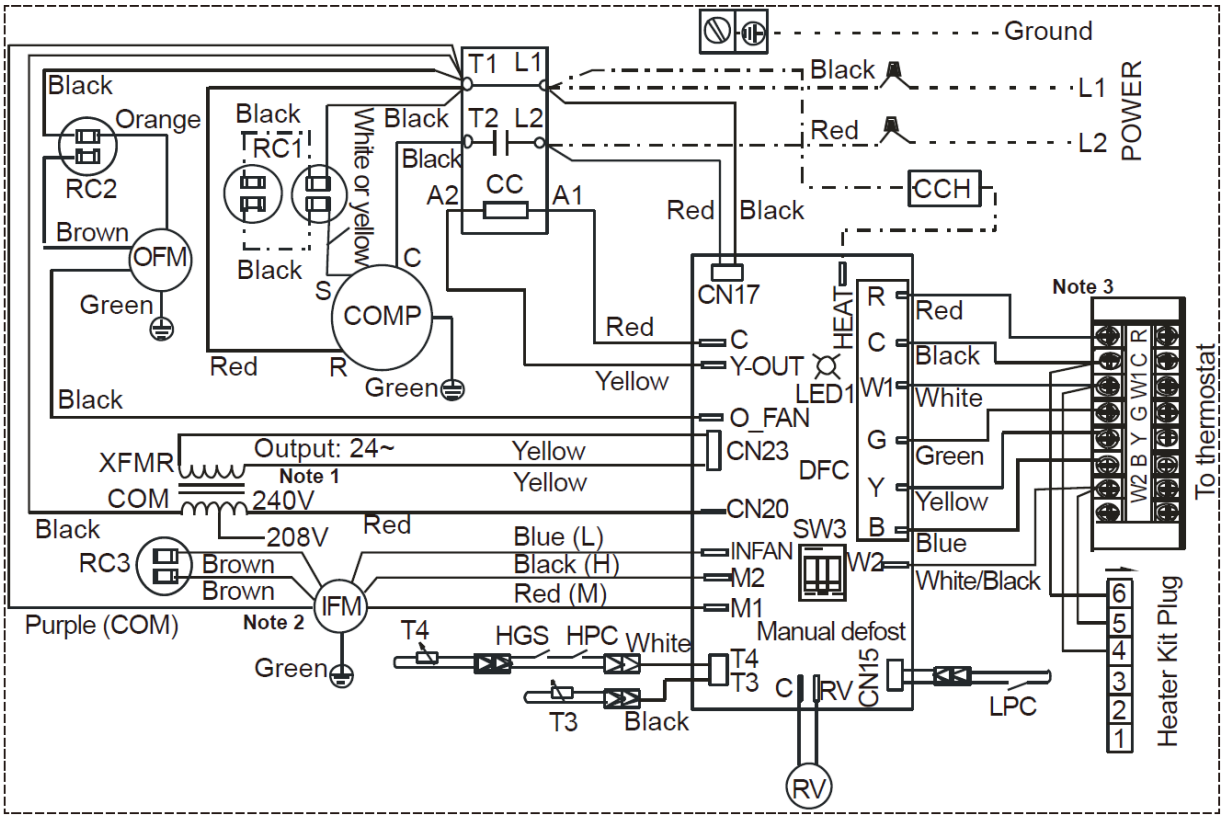

MRC-30HWN1-M14T, MRC-36HWN1-M14L, MRC-60HWN1-M14L:

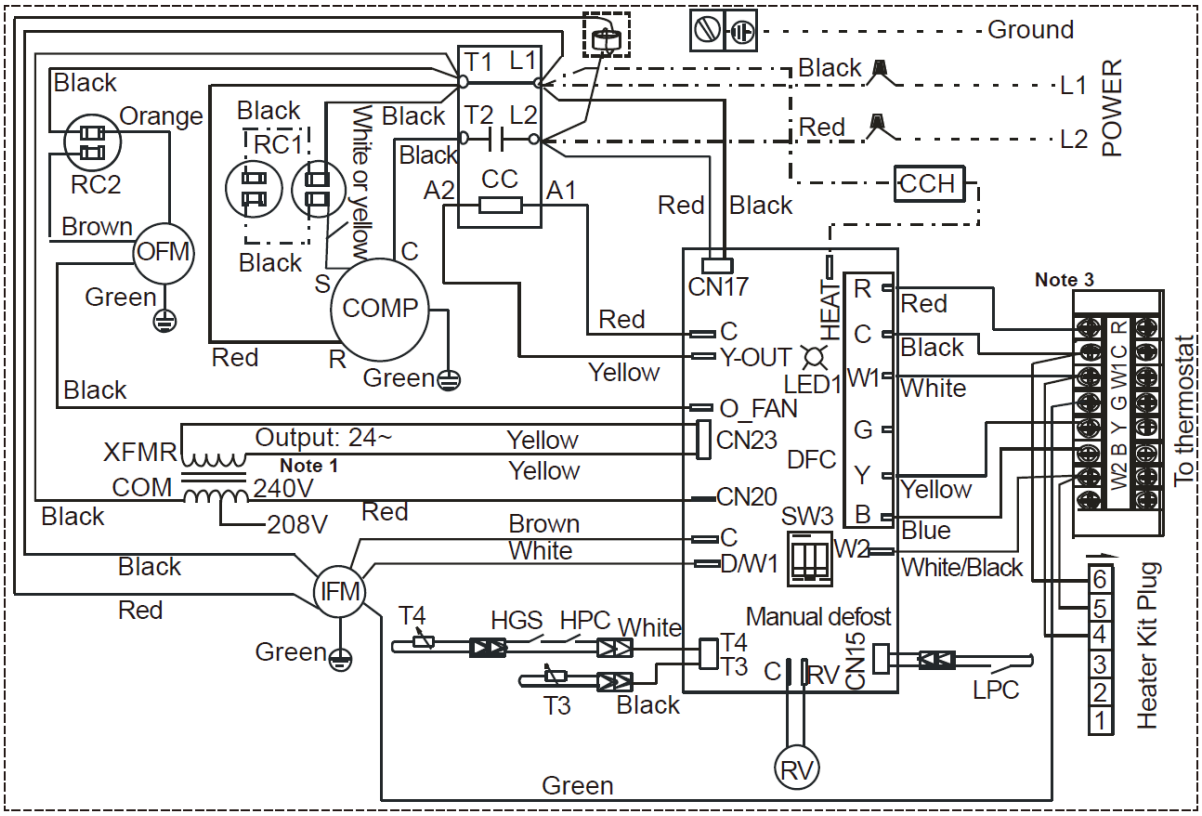

CC	Compressor contactor
CCH	Crankcase heater
COMP	Compressor
DFC	Defrost control
T4	Ambient temperature
T3	Pipe temperature
HPC	High pressure cut-out control
LPC	Low pressure cut-out control
OFM	Outdoor fan motor
RC1	Compressor run capacitor
RC2	Outdoor fan motor run capacitor
RC3	Indoor fan motor run capacitor
RV	Reversing valve
GND	Ground chassis
HGS	Hot gas or compressor top sensor
IFM	Indoor fan motor

Line voltage

Factory standard

Field installed

Factory optional

Low voltage

Factory standard

Field installed

Factory optional

Use copper conductors only.

Warning:
Cabinet must be permanently grounded and all wiring to conform to I.E.C, N.E.C, C.E.C, and local codes as applicable replacement wire must be the same gauge and insulation type as original wire.

Terminal:

R	24V power		C	24V COM
B	Reversing valve		W1, W2	Aux. heat in defrost
Y	Compressor contactor		G	Indoor fan

LED display:

0	Steady on = Normal operation
●	OFF = DFC failure
1	1 flash = T3 sensor failure
2	2 flash = T4 sensor failure / HPC or HGS open
3	3 flash = LPC open

SW3:

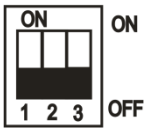

SW3-1	ON	Manual defrost
	OFF	Automatic defrost
SW3-2	ON	Reserved
	OFF	Normal defrost
SW3-3	ON	Defrosting cycle: 30min
	OFF	Defrosting cycle: 60min

IFM blower motor tap:

Purple	COM
Red	Medium
Black	High
Blue	Low

Notes:

1. Remove the red lead from 240V terminal and then connect the red lead to 208V terminal on the transformer for 208 volts.

2. Exchange the indoor blower motor red wire and blue wire for medium speed; exchange the blower motor black wire and blue wire for high speed; default as low speed of factory settings.

3. W2 wire is not provided in some models.

Airflow performance data: (Duct application 208V)

Model Number	Motor Speed	CFM (L/S) (Watts)								
		External Static Pressure – Inches W.C. [kPa]								
			0 [0]	0.1 [0.02]	0.2 [0.05]	0.3 [0.07]	0.4 [0.10]	0.5 [0.12]	0.6 [0.15]	0.7 [0.17]
MRC-24HWN1-M14T	Low	CFM (L/S)	756 (357)	706 (333)	654 (309)	600 (283)				
		RPM	460	553	638	710				
		Watts	161	159	156	152				
		Amps	0.78	0.77	0.75	0.73				
	Medium	CFM (L/S)				842 (397)	782 (369)	718 (339)	625 (295)	
		RPM				776	831	884	930	
		Watts				228	220	213	203	
		Amps				1.1	1.06	1.03	0.99	
	High	CFM (L/S)						889 (419)	805 (380)	693 (327)
		RPM						929	970	1004
		Watts						280	266	253
		Amps						1.37	1.32	1.26

Notes:

1. The above air flow data is only for reference.

2. In any situation, the airflow of the unit should be in the range of 80% to 130% of 400CFM/Ton.

Model Number	Motor Speed	CFM (L/S) (Watts)								
		External Static Pressure – Inches W.C. [kPa]								
			0 [0]	0.1 [0.02]	0.2 [0.05]	0.3 [0.07]	0.4 [0.10]	0.5 [0.12]	0.6 [0.15]	0.7 [0.17]
MRC-30HWN1-M14T	Low	CFM (L/S)	1076 (508)	1020 (481)	959 (453)	905 (427)	837 (395)			
		RPM	631	687	743	786	827			
		Watts	298	288	276	265	252			
		Amps	1.44	1.39	1.33	1.28	1.23			
	Medium	CFM (L/S)			1077 (508)	1008 (476)	933 (440)	848 (400)	741 (350)	
		RPM			784	822	858	890	921	
		Watts			330	317	302	285	267	
		Amps			1.60	1.55	1.47	1.41	1.34	
	High	CFM (L/S)				1137 (537)	1063 (502)	978 (462)	859 (405)	741 (350)
		RPM				863	892	917	943	965
		Watts				388	370	350	327	304
		Amps				1.91	1.83	1.75	1.65	1.56

Notes:

1. The above air flow data is only for reference.

2. In any situation, the airflow of the unit should be in the range of 80% to 130% of 400CFM/Ton.

Model Number	Motor Speed	CFM (L/S) (Watts)								
		External Static Pressure – Inches W.C. [kPa]								
			0 [0]	0.1 [0.02]	0.2 [0.05]	0.3 [0.07]	0.4 [0.10]	0.5 [0.12]	0.6 [0.15]	0.7 [0.17]
MRC-36HWN1-M14L	Low	CFM (L/S)	1170 (525)	1143 (539)	1110 (524)	1070 (505)	1021 (428)			
		RPM	694	752	806	859	902			
		Watts	390	376	360	343	326			
		Amps	1.88	1.81	1.73	1.66	1.58			
	Medium	CFM (L/S)			1251 (590)	1206 (569)	1148 (541)	1080 (509)	989 (466)	
		RPM			869	910	949	983	1017	
		Watts			436	416	392	368	340	
		Amps			2.11	2.01	1.91	1.8	1.68	
	High	CFM (L/S)				1345 (634)	1272 (600)	1192 (562)	1107 (522)	980 (462)
		RPM				965	995	1022	1045	1070
		Watts				499	470	441	413	377
		Amps				2.43	2.31	2.18	2.07	1.91

Notes:

1. The above air flow data is only for reference.

2. In any situation, the airflow of the unit should be in the range of 80% to 130% of 400CFM/Ton.

Model Number	Motor Speed	CFM (L/S) (Watts)								
		External Static Pressure – Inches W.C. [kPa]								
			0 [0]	0.1 [0.02]	0.2 [0.05]	0.3 [0.07]	0.4 [0.10]	0.5 [0.12]	0.6 [0.15]	0.7 [0.17]
MRC-42HWN1-M14L	Low	CFM (L/S)	1343 (634)	1307 (617)	1258 (594)	1214 (573)	1159 (547)			
		RPM	604	660	720	770	825			
		Watts	393	382	372	362	348			
		Amps	1.89	1.85	1.81	1.77	1.71			
	Medium	CFM (L/S)			1434 (677)	1383 (653)	1328 (627)	1264 (597)	1087 (513)	
		RPM			773	820	860	905	965	
		Watts			457	445	429	409	371	
		Amps			2.22	2.17	2.11	2.03	1.89	
	High	CFM (L/S)				1604 (757)	1537 (725)	1465 (691)	1371 (647)	1133 (535)
		RPM				878	913	946	978	1028
		Watts				555	531	507	480	433
		Amps				2.75	2.66	2.56	2.46	2.28

Notes:

1. The above air flow data is only for reference.

2. In any situation, the airflow of the unit should be in the range of 80% to 130% of 400CFM/Ton.

Model Number	Motor Speed	CFM (L/S) (Watts)								
		External Static Pressure – Inches W.C. [kPa]								
			0 [0]	0.1 [0.02]	0.2 [0.05]	0.3 [0.07]	0.4 [0.10]	0.5 [0.12]	0.6 [0.15]	0.7 [0.17]
MRC-48HWN1-M14L	Low	CFM (L/S)	1497 (706)	1449 (683)	1401 (661)	1349 (636)	1291 (609)			
		RPM	676	722	773	816	853			
		Watts	457	448	437	426	413			
		Amps	2.26	2.22	2.18	2.14	2.08			
	Medium	CFM (L/S)			1571 (741)	1511 (713)	1445 (681)	1370 (646)	1249 (589)	
		RPM			834	872	905	936	972	
		Watts			527	510	493	473	443	
		Amps			2.65	2.59	2.53	2.46	2.35	
	High	CFM (L/S)				1685 (795)	1610 (759)	1527 (720)	1428 (673)	1192 (562)
		RPM				927	954	980	1003	1041
		Watts				626	604	580	556	510
		Amps				3.22	3.15	3.07	2.98	2.83

Notes:

1. The above air flow data is only for reference.

2. In any situation, the airflow of the unit should be in the range of 80% to 130% of 400CFM/Ton.

Model Number	Motor Speed	CFM (L/S) (Watts)								
		External Static Pressure – Inches W.C. [kPa]								
			0 [0]	0.1 [0.02]	0.2 [0.05]	0.3 [0.07]	0.4 [0.10]	0.5 [0.12]	0.6 [0.15]	0.7 [0.17]
MRC-60HWN1-M14L	Low	CFM (L/S)	1865 (879)	1822 (859)	1770 (835)	1712 (808)	1643 (775)			
		RPM	851	886	919	948	974			
		Watts	641	620	598	578	555			
		Amps	3.08	2.98	2.88	2.79	2.69			
	Medium	CFM (L/S)			1875 (884)	1808 (853)	1729 (816)	1642 (774)	1542 (727)	
		RPM			961	984	1005	1024	1043	
		Watts			664	639	613	587	558	
		Amps			3.21	3.11	3.0	2.89	2.78	
	High	CFM (L/S)				1905 (898)	1826 (861)	1736 (819)	1615 (762)	1479 (698)
		RPM				1017	1034	1049	1063	1079
		Watts				703	677	648	619	585
		Amps				3.44	3.34	3.22	3.1	2.97

Notes:

1. The above air flow data is only for reference.

2. In any situation, the airflow of the unit should be in the range of 80% to 130% of 400CFM/Ton.

Model Number	Motor Speed	CFM (L/S) (Watts)								
		External Static Pressure – Inches W.C. [kPa]								
			0 [0]	0.1 [0.02]	0.2 [0.05]	0.3 [0.07]	0.4 [0.10]	0.5 [0.12]	0.6 [0.15]	0.7 [0.17]
MRC-24HWN1-M14T	Low	CFM (L/S)	1005 (475)	928 (438)	868 (410)	797 (376)				
		RPM	611	677	729	782				
		Watts	252	250	248	246				
		Amps	1.1	1.09	1.08	1.07				
	Medium	CFM (L/S)				1038 (490)	955 (451)	846 (400)	700 (331)	
		RPM				860	895	935	976	
		Watts				374	370	362	354	
		Amps				1.66	1.65	1.63	1.6	
	High	CFM (L/S)						1004 (474)	847 (400)	604 (285)
		RPM						975	1005	1036
		Watts						492	481	468
		Amps						2.26	2.22	2.17

Notes:

1. The above air flow data is only for reference.

2. In any situation, the airflow of the unit should be in the range of 80% to 130% of 400CFM/Ton.

Model Number	Motor Speed	CFM (L/S) (Watts)								
		External Static Pressure – Inches W.C. [kPa]								
			0 [0]	0.1 [0.02]	0.2 [0.05]	0.3 [0.07]	0.4 [0.10]	0.5 [0.12]	0.6 [0.15]	0.7 [0.17]
MRC-30HWN1-M14T		CFM (L/S)	1227 (579)	1185 (560)	1150 (543)	1122 (530)	1085 (512)	1055 (498)	1024 (484)	980 (463)
		RPM	704	754	805	848	887	932	978	1018
		Watts	203	217	230	237	250	262	274	282
		Amps	1.6	1.7	1.8	1.9	1.95	2.03	2.12	2.18
MRC-36HWN1-M14L		CFM (L/S)	1411 (666)	1365 (645)	1330 (628)	1298 (613)	1265 (597)	1236 (584)	1205 (569)	1174 (554)
		RPM	802	844	886	924	961	997	1037	1075
		Watts	301	316	330	341	350	362	374	386
		Amps	2.29	2.38	2.48	2.56	2.62	2.7	2.79	2.91

Notes:

1. The above air flow data is only for reference.

2. In any situation, the airflow of the unit should be in the range of 80% to 130% of 400CFM/Ton.

Model Number	Motor Speed	CFM (L/S) (Watts)								
		External Static Pressure – Inches W.C. [kPa]								
			0 [0]	0.1 [0.02]	0.2 [0.05]	0.3 [0.07]	0.4 [0.10]	0.5 [0.12]	0.6 [0.15]	0.7 [0.17]
MRC-42HWN1-M14L	Low	CFM (L/S)	1515 (715)	1444 (682)	1384 (654)	1321 (624)	1250 (590)			
		RPM	674	727	773	816	855			
		Watts	495	476	458	440	421			
		Amps	2.15	2.07	2	1.92	1.85			
	Medium	CFM (L/S)			1559 (736)	1490 (704)	1416 (669)	1335 (630)	1239 (585)	
		RPM			828	867	900	930	961	
		Watts			547	527	506	483	458	
		Amps			2.4	2.31	2.23	2.14	2.04	
	High	CFM (L/S)				1683 (795)	1598 (755)	1507 (712)	1409 (665)	1289 (609)
		RPM				923	950	973	996	1020
		Watts				640	613	586	559	528
		Amps				2.84	2.72	2.61	2.51	2.38

Notes:

1. The above air flow data is only for reference.

2. In any situation, the airflow of the unit should be in the range of 80% to 130% of 400CFM/Ton.

Model Number	Motor Speed	CFM (L/S) (Watts)								
		External Static Pressure – Inches W.C. [kPa]								
			0 [0]	0.1 [0.02]	0.2 [0.05]	0.3 [0.07]	0.4 [0.10]	0.5 [0.12]	0.6 [0.15]	0.7 [0.17]
MRC-48HWN1-M14L	Low	CFM (L/S)	1694 (800)	1614 (762)	1545 (730)	1473 (696)	1398 (660)			
		RPM	735	781	820	857	888			
		Watts	521	504	487	471	454			
		Amps	2.33	2.28	2.22	2.17	2.12			
	Medium	CFM (L/S)			1717 (811)	1642 (775)	1560 (737)	1466 (692)	1363 (644)	
		RPM			874	904	930	957	982	
		Watts			588	566	547	525	502	
		Amps			2.72	2.65	2.59	2.52	2.46	
	High	CFM (L/S)				1822 (860)	1722 (813)	1625 (767)	1515 (715)	1394 (658)
		RPM				955	977	996	1015	1034
		Watts				691	668	644	618	593
		Amps				3.3	3.23	3.15	3.08	3

Notes:

1. The above air flow data is only for reference.

2. In any situation, the airflow of the unit should be in the range of 80% to 130% of 400CFM/Ton.

Model Number	Motor Speed	CFM (L/S) (Watts)								
		External Static Pressure – Inches W.C. [kPa]								
			0 [0]	0.1 [0.02]	0.2 [0.05]	0.3 [0.07]	0.4 [0.10]	0.5 [0.12]	0.6 [0.15]	0.7 [0.17]
MRC-60HWN1-M14L		CFM (L/S)	2001 (945)	1954 (923)	1907 (900)	1860 (878)	1814 (857)	1768 (835)	1724 (814)	1681 (794)
		RPM	846	885	927	966	1002	1035	1070	1102
		Watts	445	462	486	503	519	534	550	564
		Amps	3.24	3.35	3.5	3.61	3.71	3.8	3.9	3.99

Notes:

1. The above air flow data is only for reference.

2. In any situation, the airflow of the unit should be in the range of 80% to 130% of 400CFM/Ton.

Electric heater data:

Model number	Heater Circuit					
	Model	**kW**	**Stages**	**Amps.**	**MCA[1] (Amps.)**	**Max. fuse[2] / Breaker[3] size (Amps.)**
MRC-24HWN1-M14T	**EHK-05G**	3.8 / 5	1	18.1 / 20.8	23 / 26	25 / 30
	EHK-08G	5.6/7.5	1	27.1 / 31.3	34 / 39	35 / 40
	EHK-10G	7.5 / 10	1	36.1 / 41.7	45 / 52	45 / 60
MRC-30HWN1-M14T	**EHK-05G**	3.8 / 5	1	18.1 / 20.8	23 / 26	25 / 30
	EHK-08G	5.6 / 7.5	1	27.1 / 31.3	34 / 39	35 / 40
	EHK-10G	7.5 / 10	1	36.1 / 41.7	45 / 52	45 / 60
	EHK-15G	11.3 / 15	2	54.2 / 62.5	68 / 78	70 / 80
MRC-36HWN1-M14L	**EHK-05G**	3.8 / 5	1	18.1 / 20.8	23 / 26	25 / 30
	EHK-08G	5.6 / 7.5	1	27.1 / 31.3	34 / 39	35 / 40
	EHK-10G	7.5 / 10	1	36.1 / 41.7	45 / 52	45 / 60
	EHK-15G	11.3 / 15	2	54.2 / 62.5	68 / 78	70 / 80

Notes:

1. Minimum Circuit Ampacity.

2. Maximum Over Current Protection per Standard UL 1995.

3. Fuse or HACR circuit breaker size installed at factory or field installed.

4. The electric heaters are optional.

Model number	Heater Circuit					
	Model	kW	Stages	Amps.	MCA[1] (Amps.)	Max. fuse[2] / Breaker[3] size (Amps.)
MRC-42HWN1-M14L	EHK-05G	3.8 / 5	1	18.1 / 20.8	23 / 26	25 / 30
	EHK-08G	5.6 / 7.5	1	27.1 / 31.3	34 / 39	35 / 40
	EHK-10G	7.5 / 10	1	36.1 / 41.7	45 / 52	45 / 60
	EHK-15G	11.3 / 15	2	54.2 / 62.5	68 / 78	70 / 80
	EHK-20G	15 / 20	2	72.2 / 83.3	90 / 104	90 / 110
MRC-48HWN1-M14L	EHK-05G	3.8 / 5	1	18.1 / 20.8	23 / 26	25 / 30
	EHK-08G	5.6 / 7.5	1	27.1 / 31.3	34 / 39	35 / 40
	EHK-10G	7.5 / 10	1	36.1 / 41.7	45 / 52	45 / 60
	EHK-15G	11.3 / 15	2	54.2 / 62.5	68 / 78	70 / 80
	EHK-20G	15 / 20	2	72.2 / 83.3	90 / 104	90 / 110
MRC-60HWN1-M14L	EHK-05G	3.8 / 5	1	18.1 / 20.8	23 / 26	25 / 30
	EHK-08G	5.6 / 7.5	1	27.1 / 31.3	34 / 39	35 / 40
	EHK-10G	7.5 / 10	1	36.1 / 41.7	45 / 52	45 / 60
	EHK-15G	11.3 / 15	2	54.2 / 62.5	68 / 78	70 / 80
	EHK-20G	15 / 20	2	72.2 / 83.3	90 / 104	90 / 110

Notes:

1. Minimum Circuit Amps.

2. Maximum Over Current Protection per Standard UL 1995.

3. Fuse or HACR circuit breaker size installed at factory or field installed.

4. The electric heaters are optional.

更改记录：

在[14PH-201601-01]，第 2 页 MIDEA CONDENSING UNIT NOMENCLATURE 改为 NOMENCLATURE。

在[14PH-201602-02]，第 39~40 页增加电辅热为可选。

Commercial Air Conditioner Division
Midea Group

Add.: West Midea Headquarters Building, 6 Midea Avenue, Shunde, Foshan, Guangdong, China.
Postal Code: 528311
cac.midea.com global.midea.com.cn

Midea CAC owns the rights to change the data without notice for product improvement.