Fanpac

Mobile, Residential and Industrial Evaporative Coolers

800 West Grant Street, Phoenix, AZ 85007 | PH: 602-251-2003, Fax: 602-251-2043

www.fanpachvac.com

Fanpac

Ducted Coolers

Model	Cabinet (in)			Duct Opening (in)				Drainage (in)		Bottom Pan (in)	Blower (in)			Blower Pulley (in)
	High	Width	Depth	Opening		Position		Position		High				
	H	W	D	A	B	C	E	F	G	J	Diameter	Width	Shaft	Diameter
A38S	28 1/4	28	28	13 3/4	13 3/4	10	7 1/8	14	4 1/2	3 1/2	12	12	5/8	7
A48S	35 1/4	34	34	17 3/4	17 3/4	11 3/4	8 1/8	17	5 1/2	3 1/2	16	16	5/8	11
A68S	42 1/4	37	37	19 3/4	19 3/4	12 1/4	8 5/8	18 1/2	6	3 1/2	19	18	1	11
A38D	25 1/4	28	28	13 3/4	13 3/4	4	7 1/8	14	4 1/2	3 1/2	12	12	5/8	7
A48D	35 1/4	34	34	17 3/4	17 3/4	4 1/2	8 1/2	17	5 1/2	3 1/2	16	16	5/8	11
A68D	42 1/4	37	37	19 3/4	19 3/4	4 3/8	8 5/8	18 1/2	6	3 1/2	19	18	1	11

Model	Electrical Specs.					Belt	Weigth (lbs)		Pads (in)		
	Motor					Size	Shipping	Working	#	High	Width
	H.P.	Speeds	Volts	Hertz	Amperes						
A38S	1/3	2	115	60	5.5	A-43 (4L-450)	79.7	171.8	3	21 1/4	21 1/2
A48S	1/2	2	115	60	7.5	A-57 (4L-590)	126.0	270.9	3	28 1/8	27 1/8
A68S	3/4	2	115	60	10.2	A-58 (4L-600)	170.0	326.0	3	35 1/2	30 1/2
A38D	1/3	2	115	60	5.5	A-42 (4L-440)	88.5	173.0	4	21 1/4	21 1/2
A48D	1/2	2	115	60	7.5	A-56 (4L-580)	134.8	249	4	28 1/8	27 1/8
A68D	3/4	2	115	60	10.2	A-58 (4L-600)	181	296	4	30 1/2	30 1/2

S = side discharge
D = down discharge

Model	Air Delivery (PCM) vs Static Pressure						
	Nominal	Water Inch Column					
	CFM	0	0.1	0.2	0.3	0.4	0.5
A38S	3800	2300	2260	2210	2115	1965	1770
A48S	4800	3600	3530	3350	3120	2860	2565
A68S	6800	4900	4610	4350	4080	3920	2880
A38D	3800	2300	2260	2210	2115	1965	1770
A48D	4800	3600	3530	3350	3120	2860	2565
A68D	6800	4900	4610	4350	4080	3920	3880

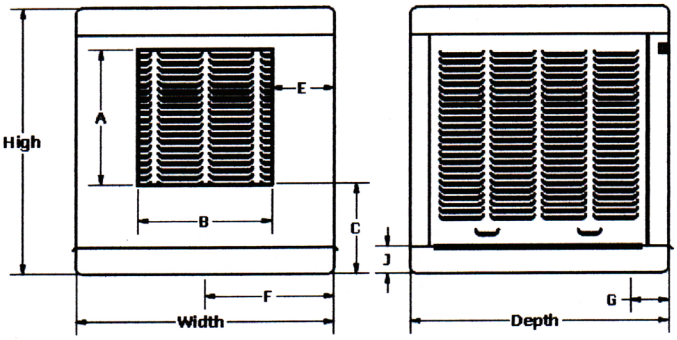

Side Discharge

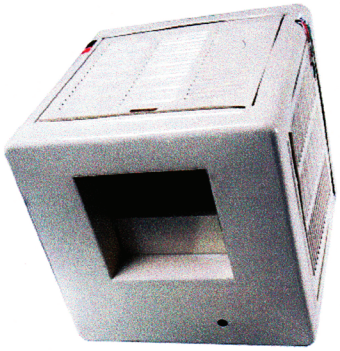

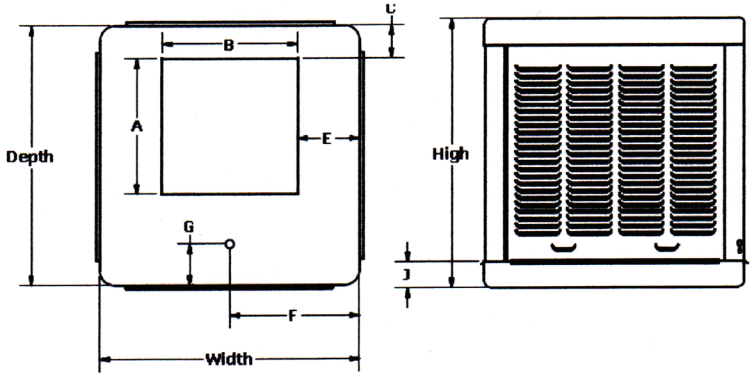

Down Discharge

Fanpac